Hybrid Inverter

HNS 3000/ 3600/ 4000/ 4600/ 5000/ 6000 HS
HNS 3000/ 3600/ 4000/ 4600/ 5000/ 6000 HS-HV

Installation and Operation Manual

www.aforenergy.com

Version: 03.6101000200001/V0.02

Afore
Afore New Energy Technology (Shanghai) Co., Ltd.
T 86-21-54326236 F +86-21-54326136 E info@aforenergy.com
Ad No.2755,Sanlu Rd.Minhang District,Shanghai,China.201112

Afore
Afore New Energy Technology (Shanghai) Co., Ltd.

Contents

1. About This Manual

1.1 Scope of Validity

This manual describes the installation, commissioning, operation and maintenance of the following PV Hybrid inverters produced by Afore New Energy:
Low-voltage models: HNS3000HS, HNS3600HS, HNS4000HS, HNS4600HS, HNS5000HS and HNS6000HS

High-voltage models: HNS3000HS-HV, HNS3600HS-HV, HNS4000HS-HV, HNS4600HS-HV, HNS5000HS-HV and HNS6000HS-HV

Please keep this manual stored carefully and accessible at any time.

1.2 Target Group

This manual is for qualified personnel. The tasks described in this manual must only be performed by qualified personnel.

1.3 Operation Modes Introduction

HNS series hybrid inverter can be used to increase energy independence for homeowners. To optimize self-consumption, the battery can be automatically charge and discharged on the basis of customized setting. Significantly reduce the amount of energy purchased from public grid.

A. Solar and energy storage hybrid system

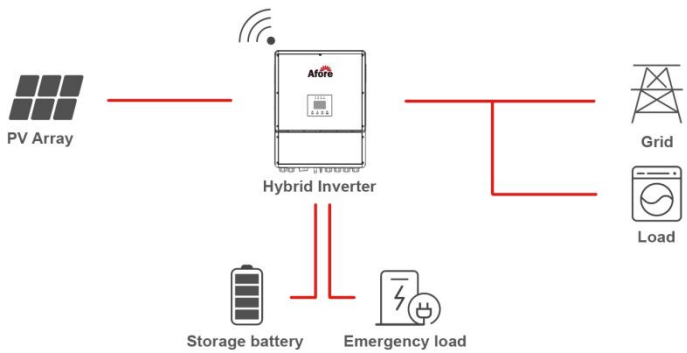

B. Energy storage system without solar

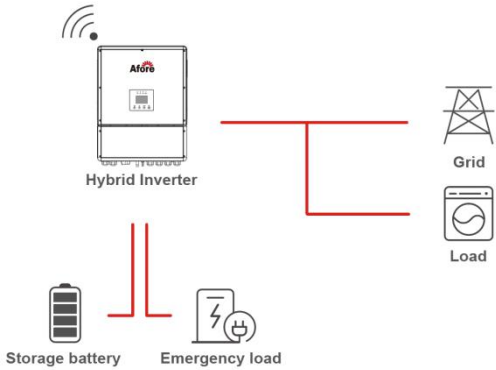

C. On-grid solar system without battery (hybrid ready)

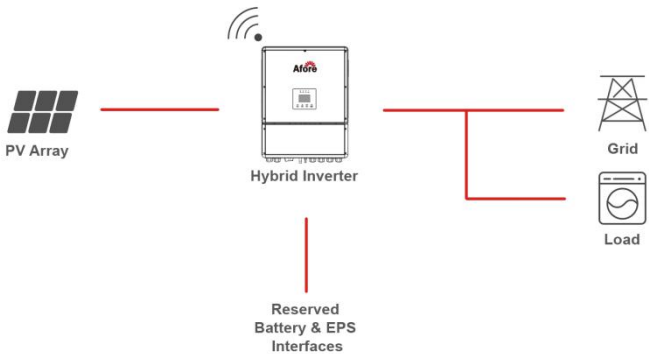

D. Off-grid and back-up applications

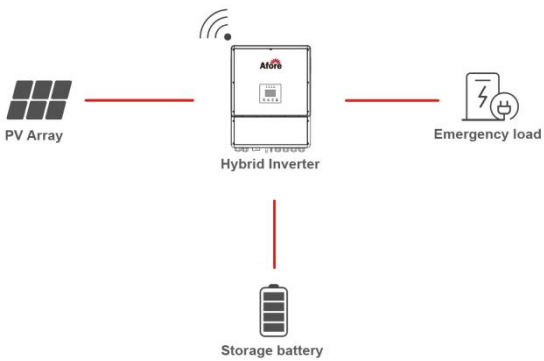

1.4 Run Modes Introduction

1.4.1 Normal Mode

In this operating mode, the priority order of power distribution is:
Load→Battery→Grid
1. PV discharge and battery storage meet the load needs first
2. The energy that cannot be used up by the load is stored in the battery
3. If the power is not used up by load and the battery is full, or the input power is greater than the charging power and the load power, the excess power will be sent to the grid

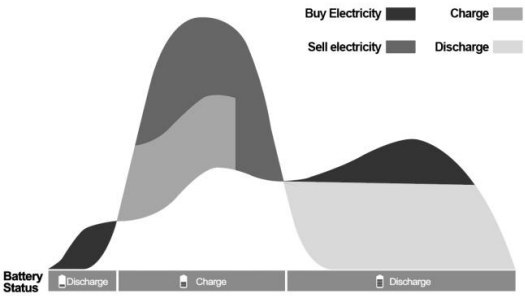

1.4.2 Self use

In this operating mode, the priority order of power distribution is: Load→Battery
1. PV discharge and battery storage meet the load needs first
2. The energy that cannot be used up by the load is stored in the battery
3. If the power is not used up by load and the battery is full,the excess power will be sent to the grid,achieve reverse flow control

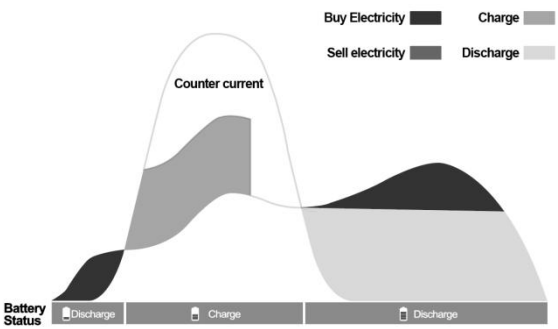

1.4.3 Steady output to the grid

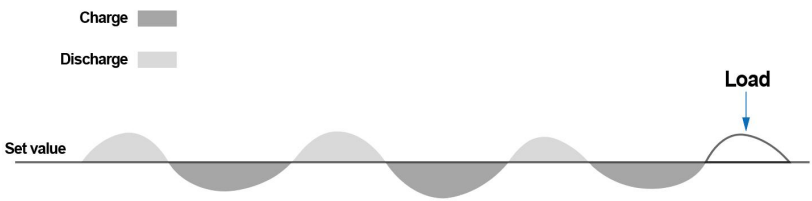

This operating mode controls the purchase/sale of electricity from the grid to a stable value

1.4.4 Sell First

In this operating mode,PV power generated is sold to the grid first, and the excess electricity is used for the load.

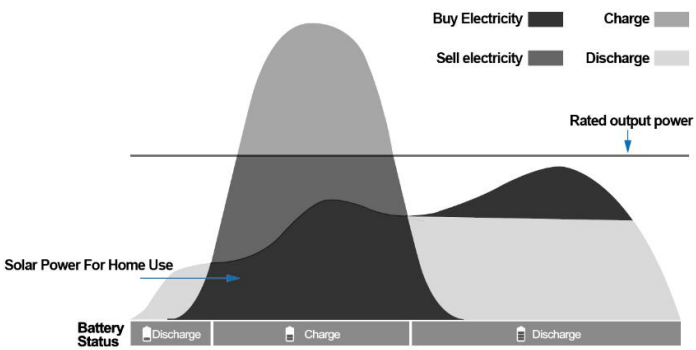

1.4.5 All Sell

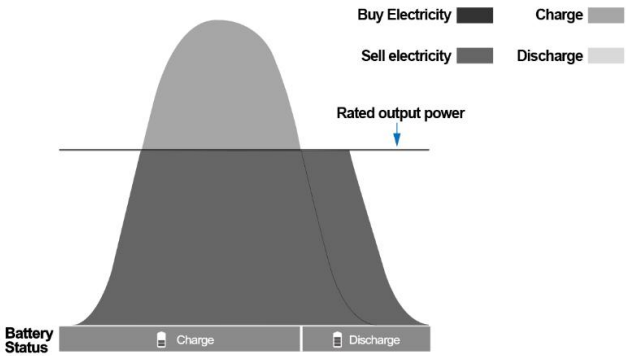

In this mode, there is no local load and all electricity is sold to the grid. When the PV input power is greater than the inverter output power, the excess electrical energy is stored in the battery. When the PV power is reduced, the battery discharge to replenish.

2.Safety Instructions

2.1 Safety Precautions

• All work on the inverter must be carried out by qualified electricians. And ensure that children cannot access to the inverter.

• The PV generator and inverter must be connected to the ground separately in order to reach maximum protection for property and persons.

• Do not touch cover until five minutes after disconnecting all sources of supply. This is because the charge stored in capacitors may result a risk of electric shock.

• The enclosure of Inverter can become hot during operation. To reduce the risk of injury, do not touch the cover, heat sink at the back of the PV-Inverter or nearby surfaces while Inverter is operating.

• Do not use the inverter for other purposes which not described in this manual.

• Both the inverter and associated transport packaging are mainly made of recyclable raw materials. Please ensure that the used device and any relevant accessories are disposed of in accordance with applicable regulations.

- Packed with EPE foam and carton, the inverter should be placed upwards and handled with care in delivery. Pay attention to waterproof.
- Alternative uses, modifications to the inverter not recommended. The installation of components not authorized by Afore New Energy will void the warranty claims.

2.2 Explanations of Symbols

HNS series hybrid inverter strictly comply with relevant safety standards. Please read and follow all the instructions and cautions during installation, operation and maintenance.

CE	CE Mark
	RCM Mark
SAA	Certification
	Beware of hot surface. The inverter can be hot during operating, avoid contact during operating.
	Danger of high voltage. Danger to life due to the high voltages in the inverter.
	Risk of electric shock.
	Observe enclosed documentation.
5 min	Danger of high voltage. Residual voltage in the inverter need 5min to discharge, wait 5min before operation.

3.Installation Instructions

3.1 Pre-installation

3.1.1 Unpacking & Package List

Unpacking

On receiving the inverter, please check to make sure the packing and all of the components are not missing or damaged. Please contact your dealer directly for supports if there is any damage or missing components.

Packaging List

Open the package, please check the packing list shown as below.

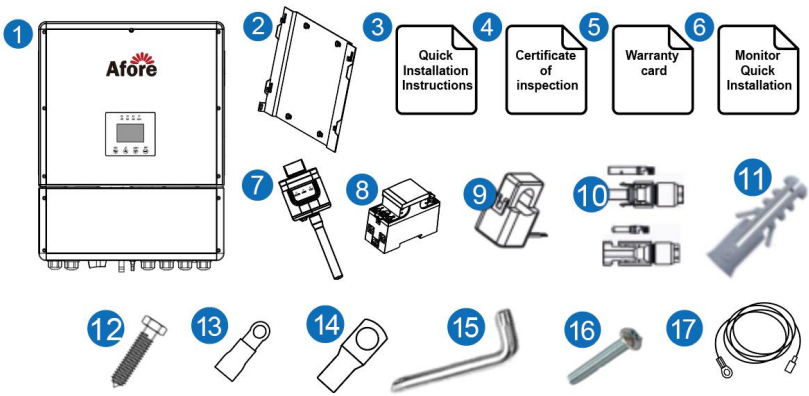

No.	Qty	Items	No.	Qty	Items
1	1	Hybrid Inverter	10	3	DC Connector Set
2	1	Wall Mounting Bracket	11	4	Plastic Expansion Tube
3	1	Quick Installation Instructions	12	4	Mounting Bracket Screw
4	1	Certificate of Inspection	13	6	Grounding Terminal
5	1	Warranty Card	14	2	CS16-8 Cold Terminal
6	1	Monitor Quick Installation	15	1	Screwdriver For Security Screw
7	1	Monitor Module	16	1	Security Screw
8	1	Smart Meter (Optional)	17	1	NTC (Optional)
9	1	CT			

3.1.2 Product Overview

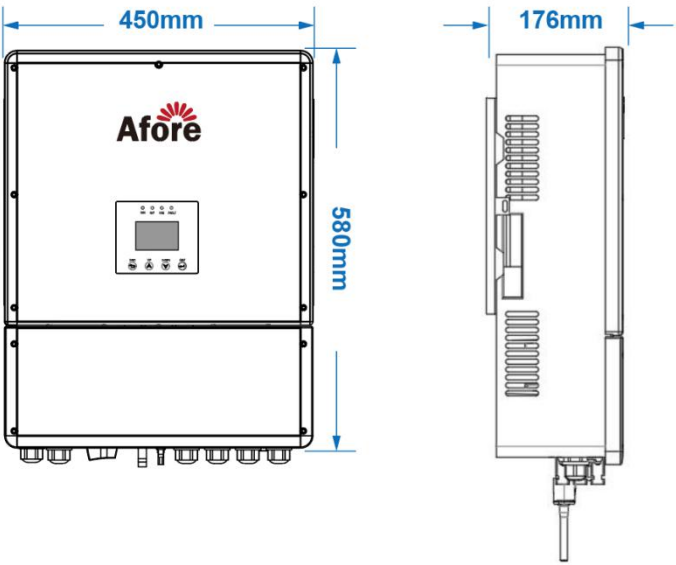

Terminals of Hybrid PV Inverter

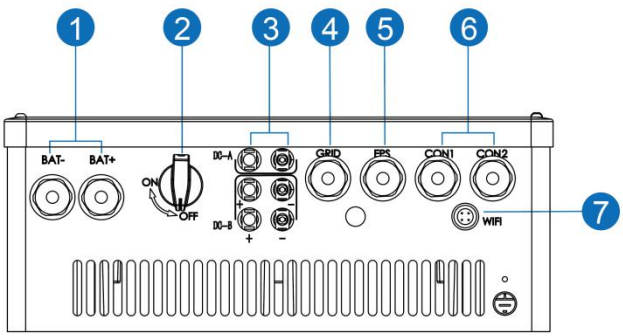

No.	Items	Remarks
1	Battery Connect	
2	DC Switch	
3	PV Input	
4	AC Output	Grid Connection
5	EPS Output	
6	Communication Connection	Including several Com ports
7	Wi-fi Module	External Wi-Fi Module

3.1.3 Select Mounting Location

The HNS hybrid inverters are designed for indoor and outdoor installation (IP65), to increase the safety, performance and lifespan of the inverter, please select the mounting location carefully based on the following rules:

The inverter should be installed on a solid surface, far from flammable or corrosion materials, where is suitable for inverter's weight and dimensions.
The ambient temperature should be within -25℃ ~ 60℃.
The installation of inverter should be protected under shelter from direct sunlight or bad weather like rain, snow, lightning, etc.

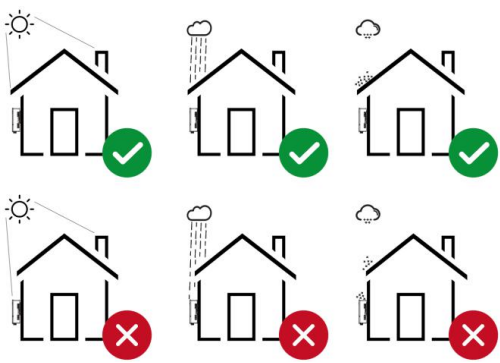

Installation Instructions

The inverter should be installed vertically on the wall, or lean back on plane with a limited tilted angle. Please refer to below figure.

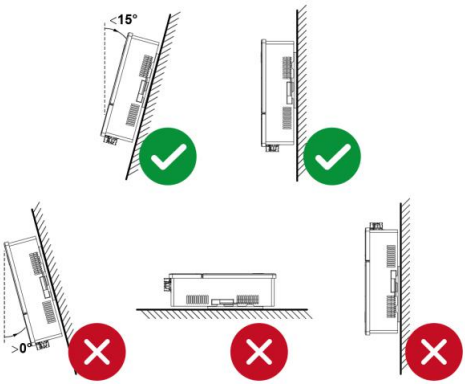

Leave the enough space around inverter, easy for accessing to the inverter, connection points and maintenance.

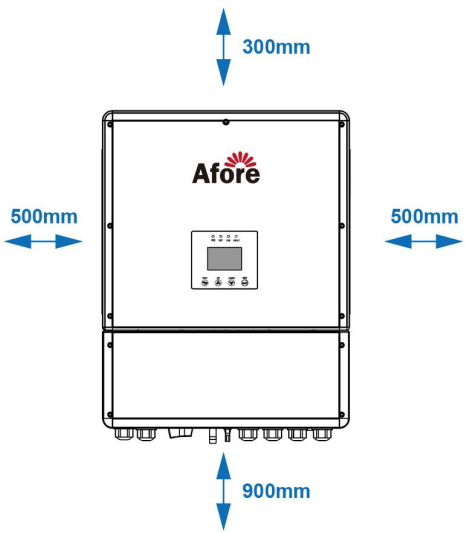

The inverter should be installed at suitable height for convenient maintenance.

3.1.4 Tools Required for Installation

In order to install the inverter properly, you will need to prepare the tools listed below.

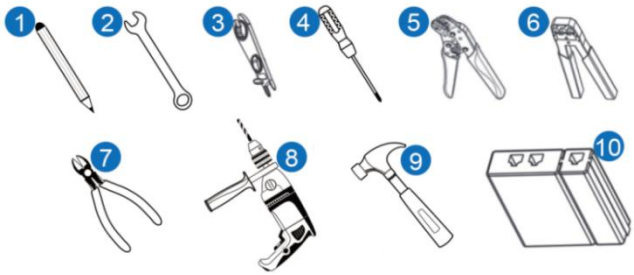

No.	Tool Name	Remarks
1	Mark Pen	Mark the screwing position
2	Spanner	
3	PV Connector Uninstall Tool	To uninstall the PV connector
4	Screw Driver	
5	Wire Crimpes	To assemble the PV connectors
6	Crimping Modular Plier	To assemble the RJ45 Line
7	Wire Cutter	
8	Electric Drill	
9	Hammer	
10	Line Tester	To test the RJ45 Line

3.2 Installation Hybrid Inverter

Step 1

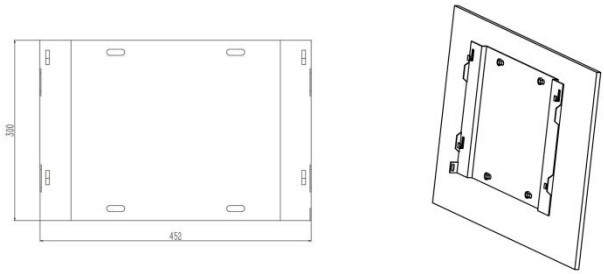

Step 2

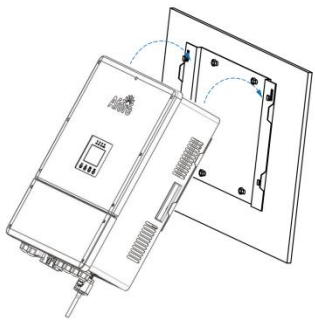

Step 3

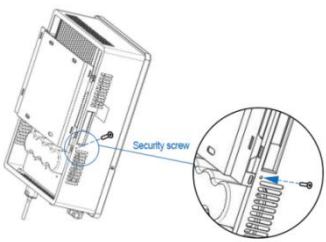

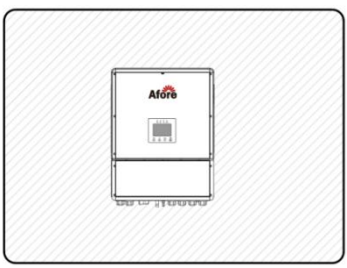

3.3 Electrical Connection

3.3.1 PV Connection

The HNS hybrid inverter have two-MPPT channels, can be connected with two strings of PV panels. Please make sure below requirements are followed before connecting PV panels / strings to the inverter.

- The open-circuit voltage and short-circuit current of PV string must not exceed inverter's range
- The isolation resistance between PV string and ground must exceed 300 kΩ
- The polarity from PV strings are correct
- Use the DC plugs in the accessory
- Disconnect all of the PV (DC) switch during wiring

Warning:

The fatal high voltage may on the PV string, please comply with electric safety when connecting.

Please make sure the right polarity of PV strings connected with inverter, otherwise inverter could be damaged.

Installation Instructions

Step 1

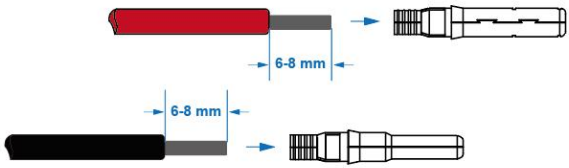

Note: PV cable suggestion	Cross - section	Cable Diameter	Minimum Voltage
	3 - 6 mm²	2-2.6mm	600V

Step 2

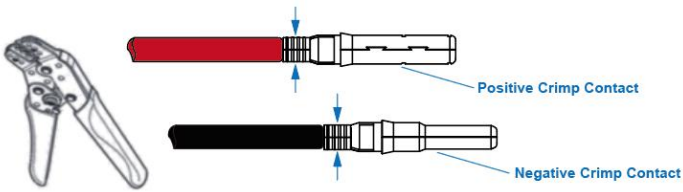

Note: Please use PV connector crimper

Use Wire Crimpes to pinch the point of the arrow

Step 3

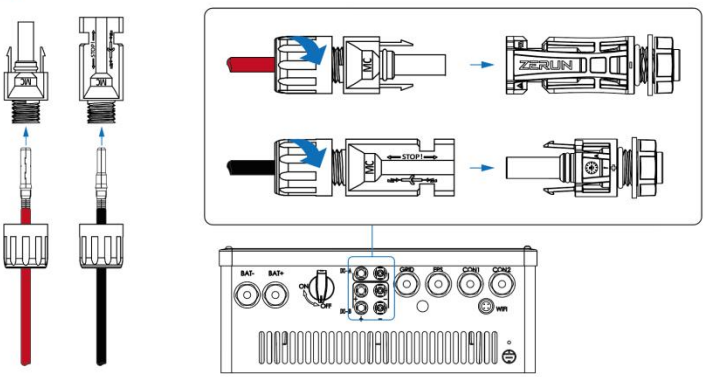

Note: You'll hear click sound when the connector assembly is correct

3.3.2 Grid Connection

The HNS hybrid inverter work with single-phase grid (220/230/240 Vac, 50/60 Hz). And external AC switch should be installed between inverter and grid to isolate from grid. Please make sure below requirements are followed before connecting AC cable to the inverter.

- AC (grid) voltage must not exceed inverter's range
- The The phase-line from AC distribution box are correctly connected
- Use the OT Terminal in the accessory
- Disconnect the AC (grid) switch during wiring
- The grid connection is respectively connected to ACL, ACN, PE in the following figure. PE can also be connected to the chassis (see section 3.3.9 for details)

Warning:
The fatal high voltage may on the AC side, please comply with electric safety when connecting.
Please make sure the right line of AC grid connected with inverter, otherwise inverter could be damaged.

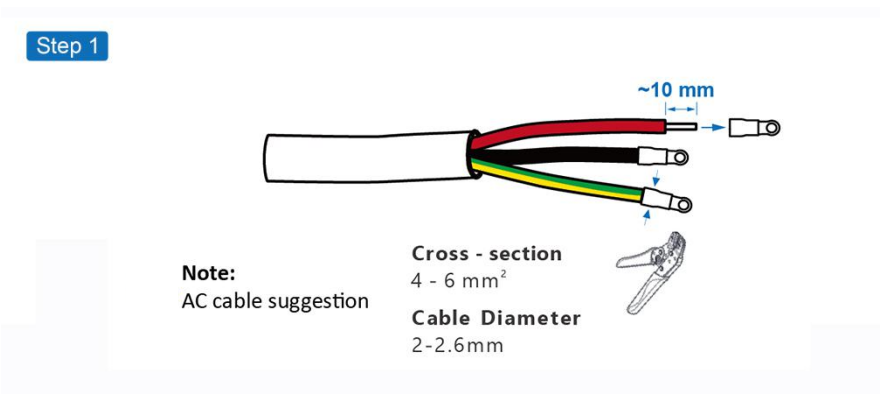

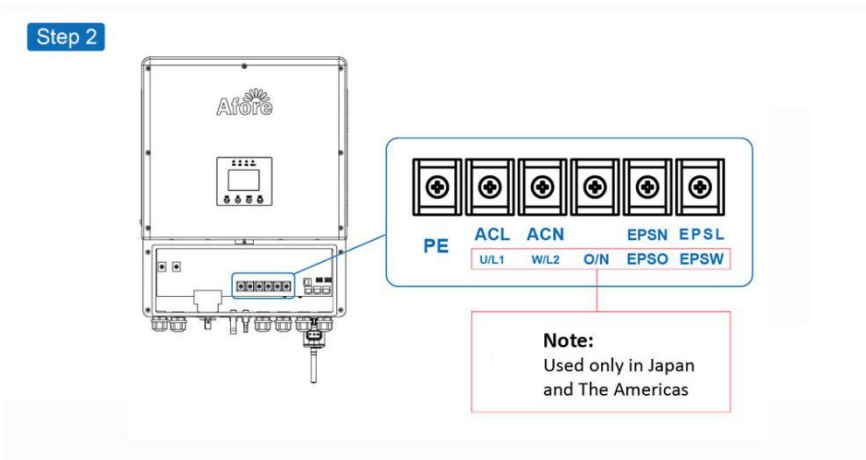

3.3.3 EPS Connection

The HNS hybrid inverter could switch operation mode automatically between on-grid and off-grid mode according to the customer setting.
Assemble and install the EPS connect is the same as AC plug, please follow 3.3.2 to connect EPS Wire.

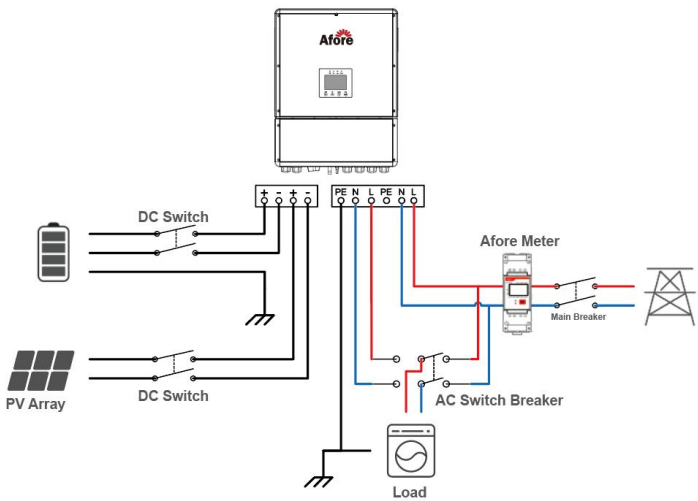

3.3.4 Battery Connection

The HNS hybrid inverter compatible with lithium battery (low-voltage model, integrated with BMS). For lead acid battery or older-technology battery, please confirm with local dealer or Afore technical support for details before use.

Warning:

Please set battery type and manufacturer when using battery, please refer to 4.3 Setting

Note:

If the inverter works with lithium-ion or ternary battery, the BMS (Battery Management System) communication is needed between inverter and battery.

Step 1

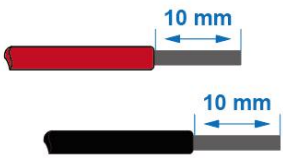

Note: Battery cable suggestion	Cross - section	Type	Diameter
	11 - 16mm²	OT (M5)	3.8 mm - 4.6 mm

Step 2

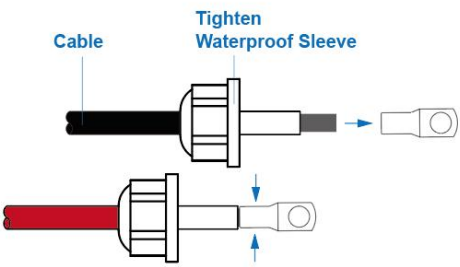

Notice: Please make sure the polarity of battery pack are correct

Step 3

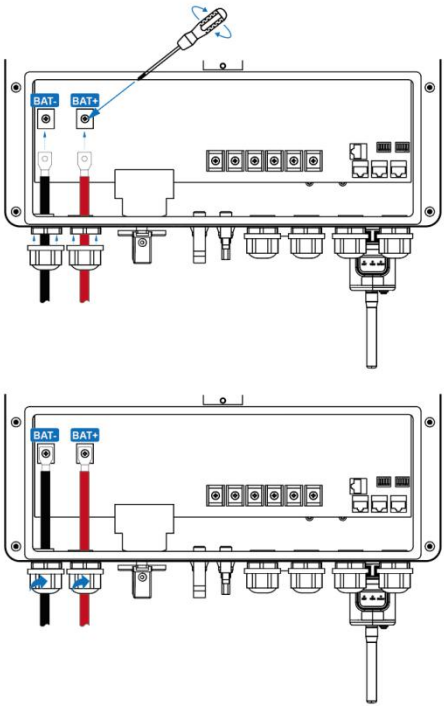

3.3.5 Communication Connection

There are communication interfaces and configuration switches on the bottom of the inverter as shown below:

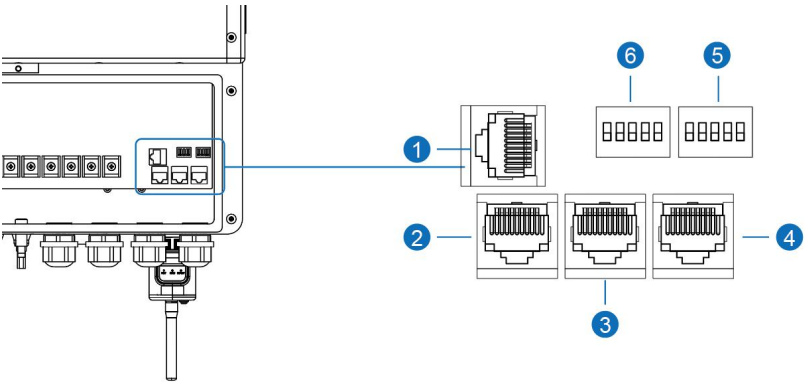

NO.	Switch	Remarks
1	DRM Australia only	
2	BAT485/CAN	
3	CT-AC/Meter	
4	CT-PV/S*485	
5	S2 Matching switch	
6	S1 Matching switch	

Battery Communication Interface Overview

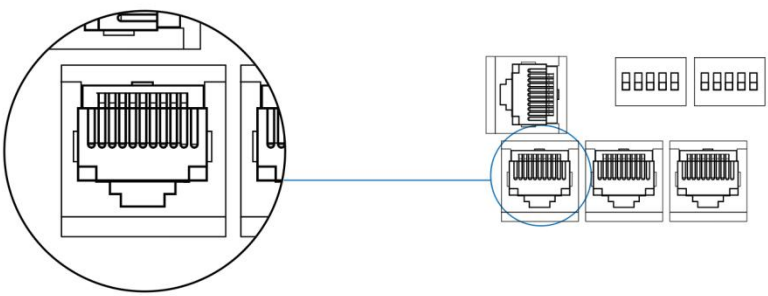

Installation Instructions

RJ45 connector pin definition **of Battery Communication port**

Pin	DRM Australia only	Pin	BAT485/CAN
1	DRM1/5	1	NTC
2	DRM2/6	2	GND
3	DRM3/7	3	GND
4	DRM4/8	4	CANH
5	REF/GEN/0	5	CANL
6	3.3V	6	GND
7	RS485-A2	7	RS485-A
8	RS485-B2	8	RS485-B

Pin	CT-AC/Meter	Pin	CT-PV/S*485
1	CT_U	1	CTU-PV
2	CT_N	2	CTN-PV
3	GND	3	GND
4	CT_W	4	CTW-PV
5	CT_N	5	CTN-PV
6	5V	6	5V
7	CT485_A	7	RS485_A2
8	CT485_B	8	RS485_B2

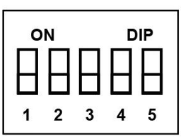

NO.	S2 Matching switch	Remarks
1	SWITCH	Short
2	CTU-PV	Add resistance
3	CTW-PV	Add resistance
4	CT_U	Add resistance
5	CT_W	Add resistance

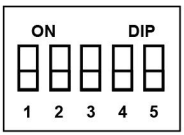

NO.	S1 Matching switch	Remarks
1	CAN-BAT	Add resistance
2	CT485	Add resistance
3	BAT485	Add resistance
4	RS485_2	Add resistance
5	485-WIFI	Add resistance

3.3.6 Meter and CT Connection

The Meter and CT are used for monitoring the power usage of home electricity consumption, and the inverter will active export control function based on the monitoring data.

Note:

One Meter or CT can be used for one Afore Hybrid inverter.

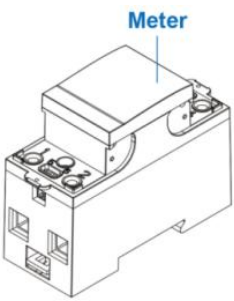

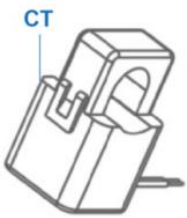

Install the Meter or CT

Installation Instructions

Step 1 **Install the Meter**

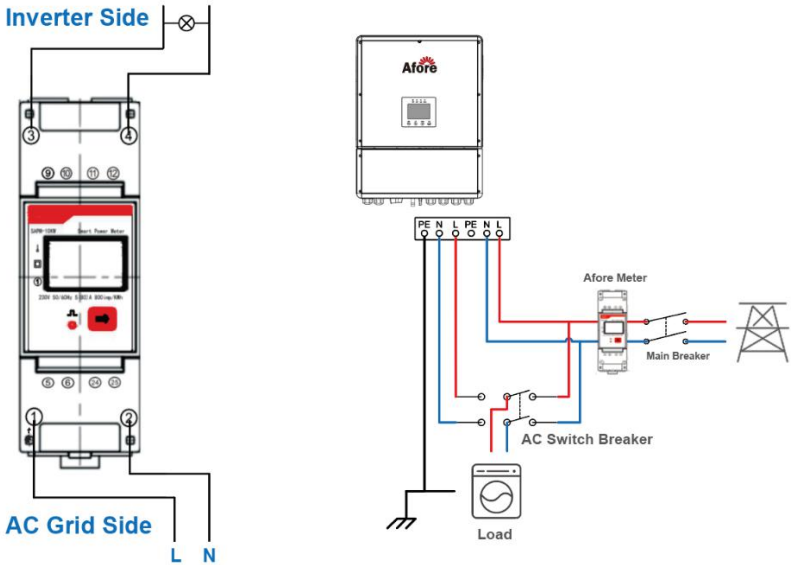

Step 2 **Connect the Meter to the inverter**

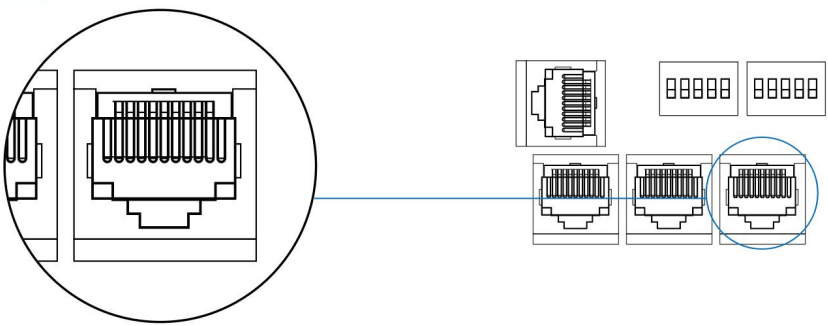

Note: The Meter Communication port

Note: The Meter Communication port

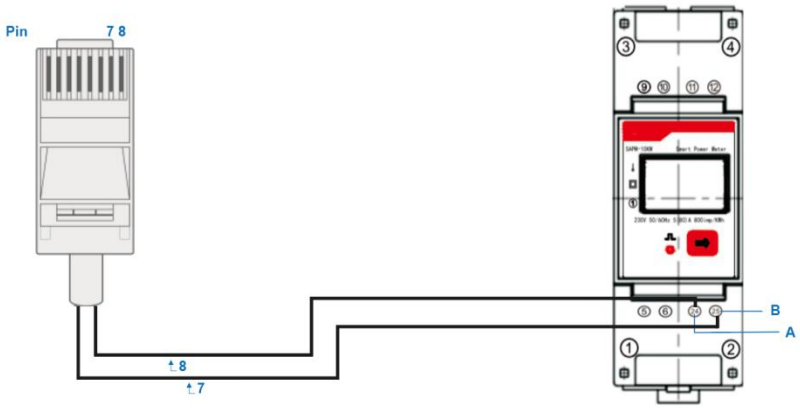

Step 3

Pin	CT-AC/Meter
1	CT_U
2	CT_N
3	GND
4	CT_W
5	CT_N
6	5V
7	CT485_A
8	CT485_B

Note: Meter pin definition

To connect the Meter to the inverter

Note:

The Meter and CT is used to detect the AC voltage and current direction. The energy from grid to load defined as positive value. The energy from inverter to grid defined as negative value.

When the meter displays negative values, it means the hybrid inverter is feeding power to the grid.

When the meter displays positive values, the load is consuming the power from grid.

When the meter displays below figures, the system is importing active energy.

When the meter displays below figures, the system is exporting active energy.

Installation Instructions

Step 1 **Install the CT**

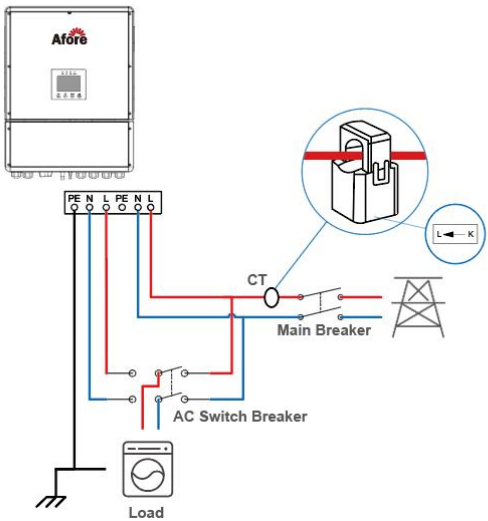

Step 2 **Connect the CT to the inverter**

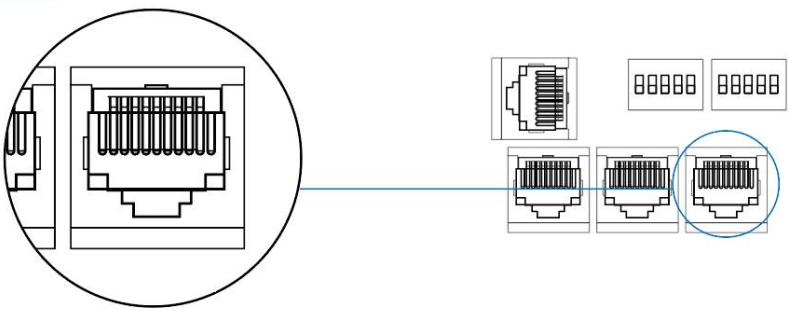

Note: The CT Communication port

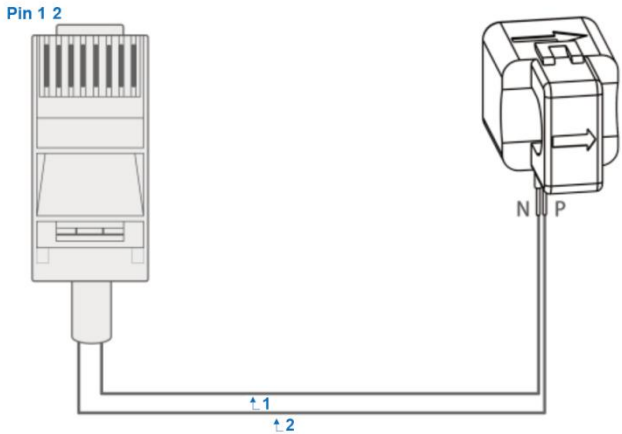

3.3.8 WiFi Connection (Optional)

The WiFi monitoring module could transmit the data to the cloud server, and display the data on the PC, tablet and smart-phone.

Install the communication rod to the inverter

Connect AC connection and turn on AC breaker, wait till the LED indicators on Wi-Fi module flashing.

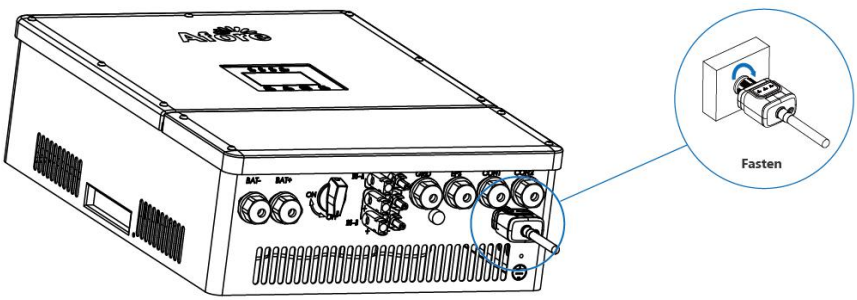

Configure the communication bar, router, account registration, etc. See the WIFI connection manual for details.

3.3.9 Earth Connection

To prevent electric shock, the user must connection a second protective earth (PE) terminal at the side of the inverter. And make sure this PE terminal is reliable grounding.

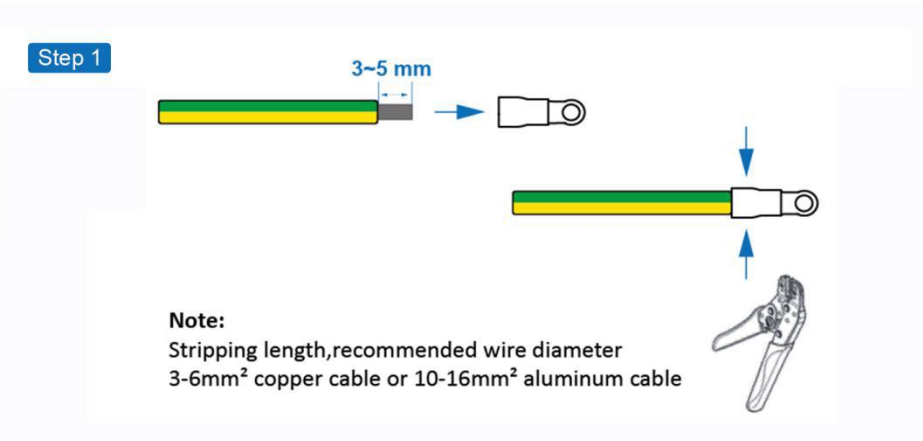

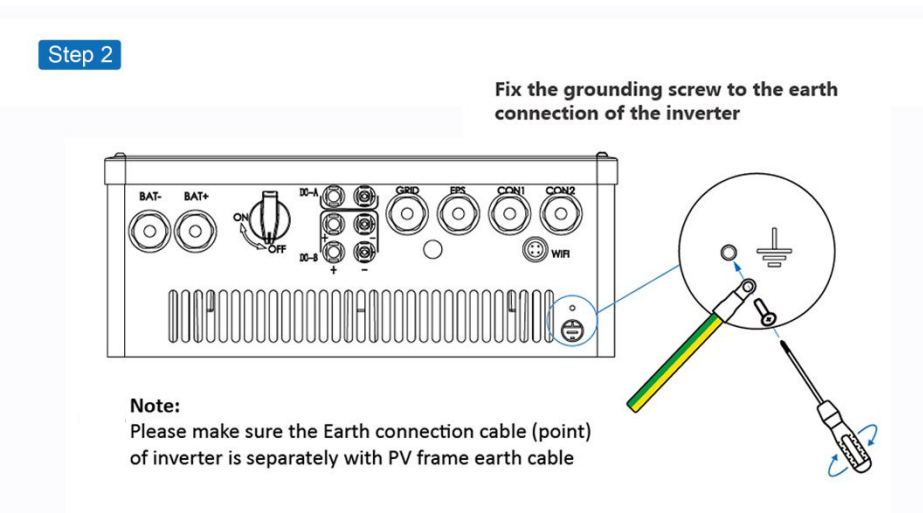

4.Operation

4.1Control Panel

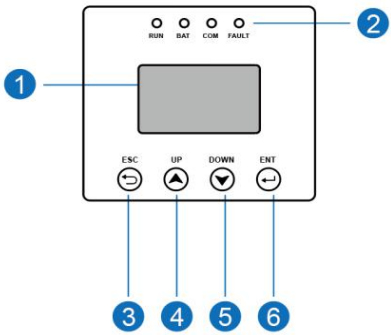

No.	Items
1	LCD Display
2	**Running** LED Indicator
	BAT LED Indicator
	COM LED Indicator
	Fault LED Indicator
3	**Return** Touch Button
4	**UP** Touch Button
5	**Down** Touch Button
6	**Enter** Touch Button

4.2 Menu Structure

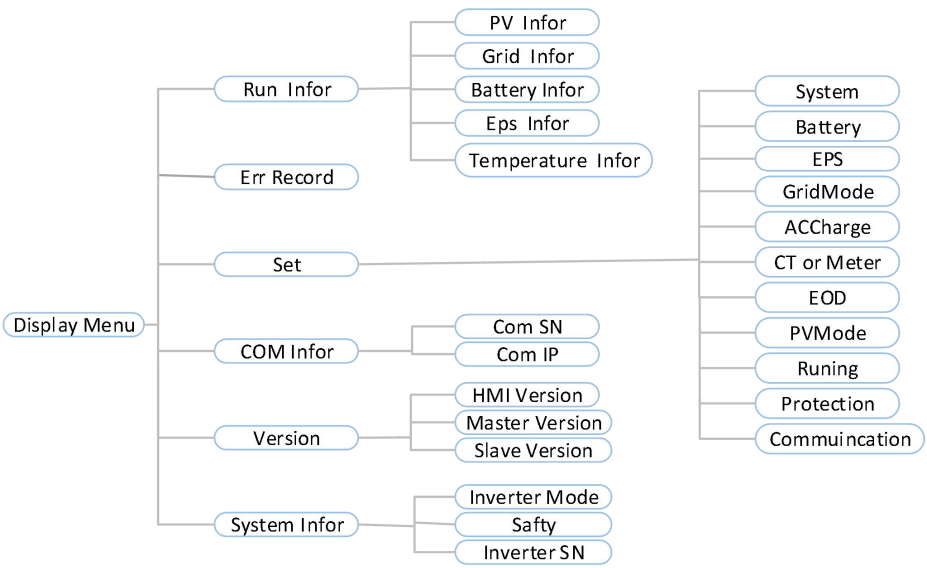

Noun Explanation of LCD Display

Nouns	Explanation	Remarks
Status	Inverter working status	
Run Infor	Inverter PV side, AC side, battery EPS, Temperature information	To review running or history data of inverter
Err Record	Inverter history fault	To review history Error Information of inverter
Set	Inverter Seting	To set running parameters of inverter
Com Infor	Inverter monitoring information	To review monitor SN and monitor IP address
Version	Inverter version information	To review inverter version
System Infor	Inverter system information	To review inverter system information

4.3 Setting

Time

Enter the time setting menu, “Enter” to enter the setting, “UP / DOWN” to adjust the number size, “Enter” to confirm, “ESC” return, set the year, month, day, hour, minute.

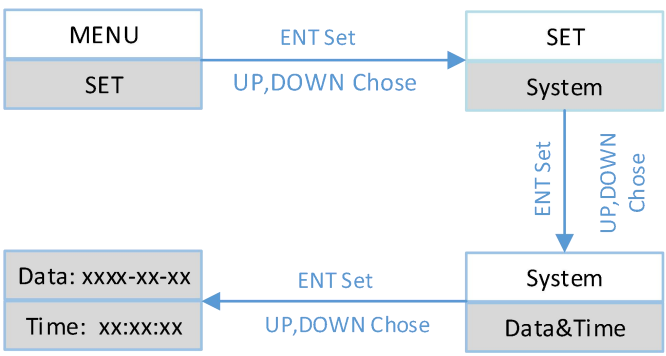

Country

Enter the Country setting menu, “UP/DOWN” select the desired Country, “Enter” to confirm.

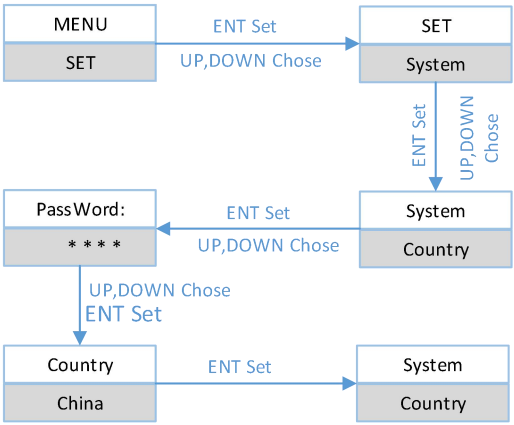

Lithium Battery

Enter the Battery setting menu, “ UP/DOWN” adjust Battery type(No Battery/Lithium Battery/ Lead-AcidBattery), “Enter” to choose “LEAD”, “Enter” to set max charge(discharge) current, max charge voltage, max discharge voltage and max floating voltage, “ESC” return, and set in order.

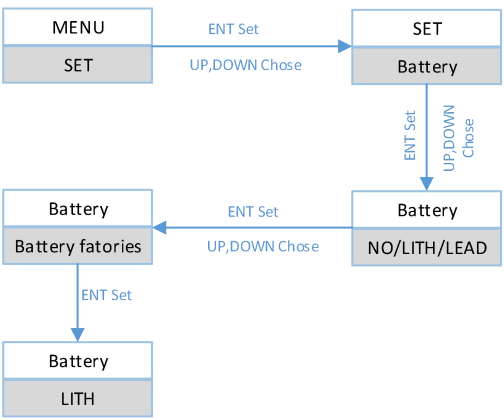

Lead-AcidBattery

Enter the Battery setting menu, “ UP/DOWN” adjust Battery type(No Battery/Lithium Battery/ Lead-AcidBattery), “Enter” to choose “LITH”, “Enter” to choose Lead-Acid Battery Parameter, “ UP/DOWN” adjust parameter value , “Enter” to set parameter, “ESC” return, and set in order.

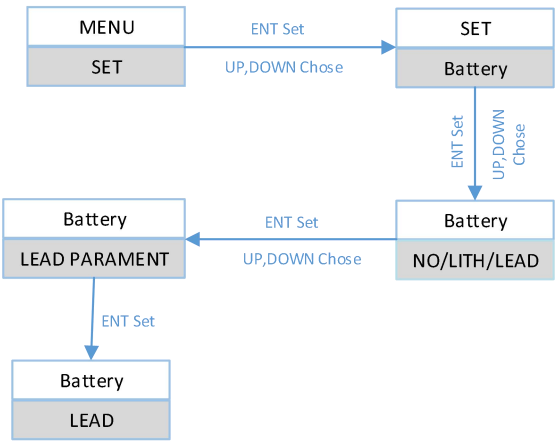

EPS

Enter the EPS setting menu, “ UP/DOWN” adjust EPS parameters(EPS Enable/EPS voltage/ EPS frequency), “Enter” to choose EPS parameter, “Enter” to set parameter, “ESC” return, and set in order.

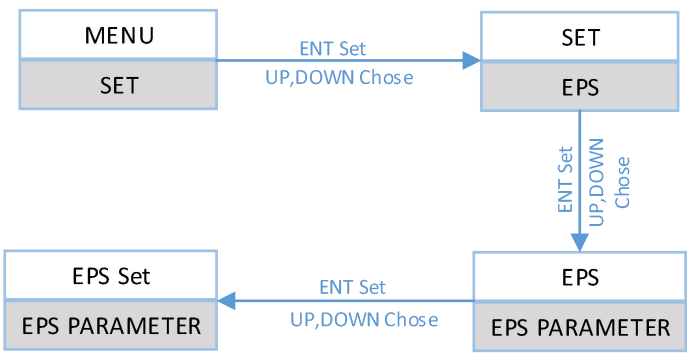

Grid Mode

Enter the Grid Mode setting menu, " UP/DOWN" adjust the Grid Mode type, "Enter" to confirm, "ESC" return, and set in order.

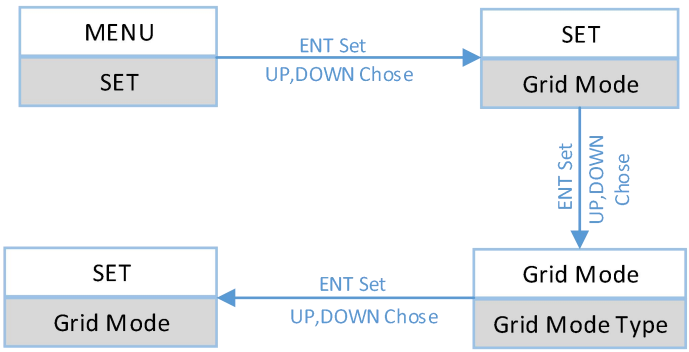

Charge Rate

Enter the Grid Mode setting menu, " UP/DOWN" adjust the Charge Rate, "Enter" to choose Charge Rate Parameter, " UP/DOWN" adjust parameter value , "Enter" to set parameter, "ESC" return, and set in order.

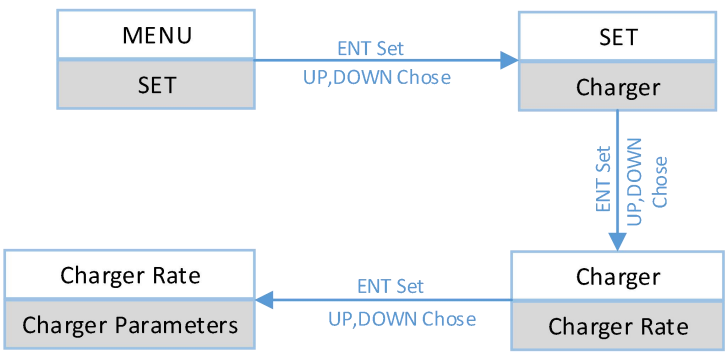

AC Charge

Enter the Grid Mode setting menu, “ UP/DOWN” adjust the AC Charge, “Enter” to choose AC Charge Parameter, “ UP/DOWN” adjust parameter value , “Enter” to set parameter, “ESC” return, and set in order.

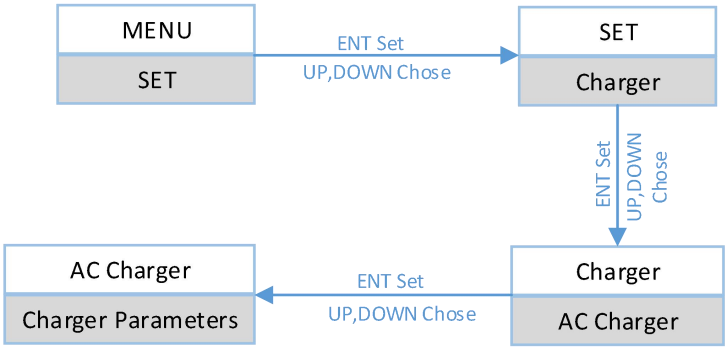

Force Charge

Enter the Grid Mode setting menu, “ UP/DOWN” adjust the Force Charge, “Enter” to choose Force Charge Parameter, “ UP/DOWN” adjust parameter value , “Enter” to set parameter, “ESC” return, and set in order.

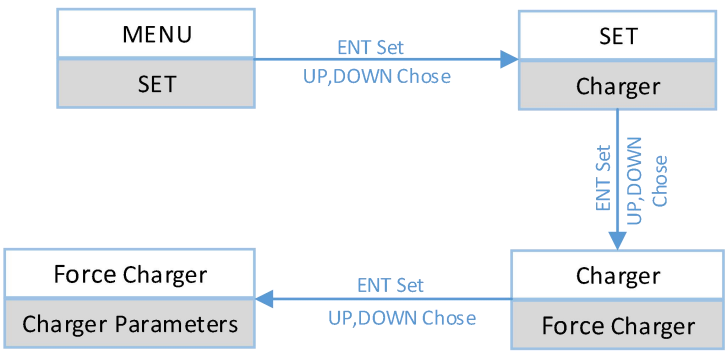

Force DisCharge

Enter the Grid Mode setting menu, " UP/DOWN" adjust the Force Discharge, "Enter" to choose Force Discharge Parameter, " UP/DOWN" adjust parameter value , "Enter" to set parameter, "ESC" return, and set in order.

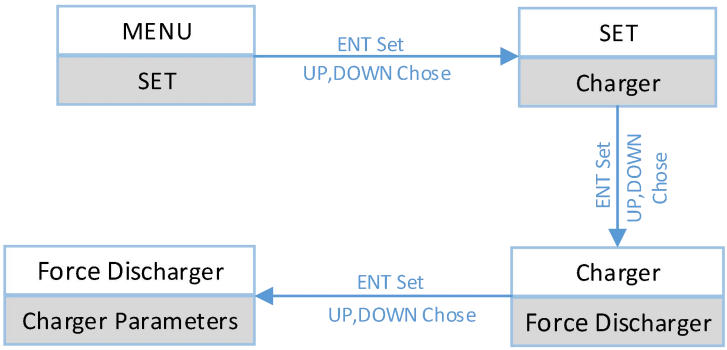

Meter or CT

Enter the Meter or CT setting menu, " UP/DOWN" adjust the number size, "Enter" to confirm, "ESC" return, and set in order.

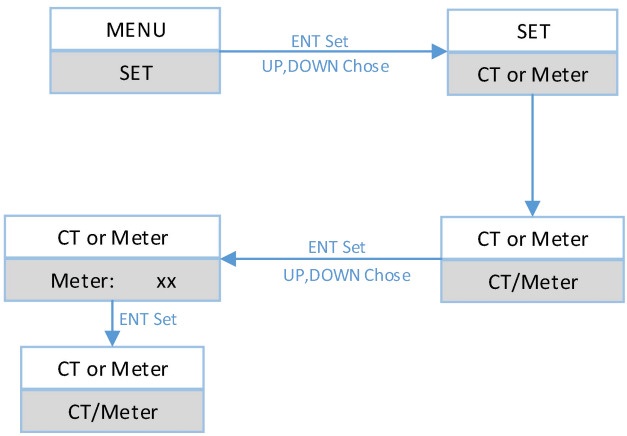

EOD

Enter the EOD setting menu, " UP/DOWN" adjust the EOD, "Enter" to choose Force EOD Parameter, " UP/DOWN" adjust parameter value , "Enter" to set parameter, "ESC" return, and set in order.

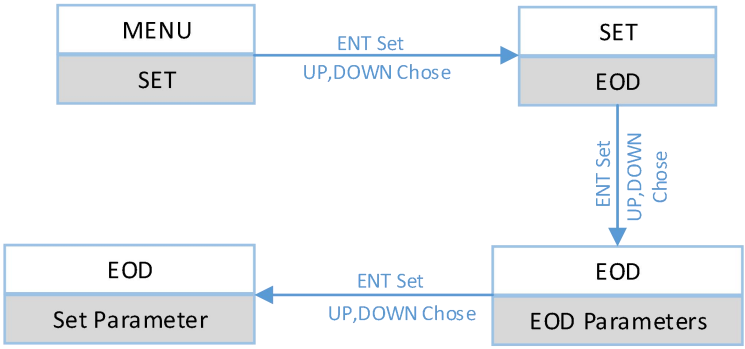

PV Mode

Enter the PV Mode setting menu, " UP/DOWN" adjust the Grid Mode type, "Enter" to confirm, "ESC" return, and set in order.

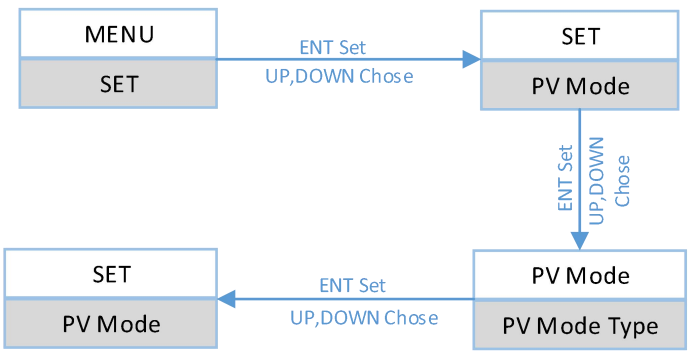

Running

Enter the Running setting menu, " UP/DOWN" adjust the Running, "Enter" to choose Force Running Parameter, " UP/DOWN" adjust parameter value , "Enter" to set parameter, "ESC" return, and set in order.

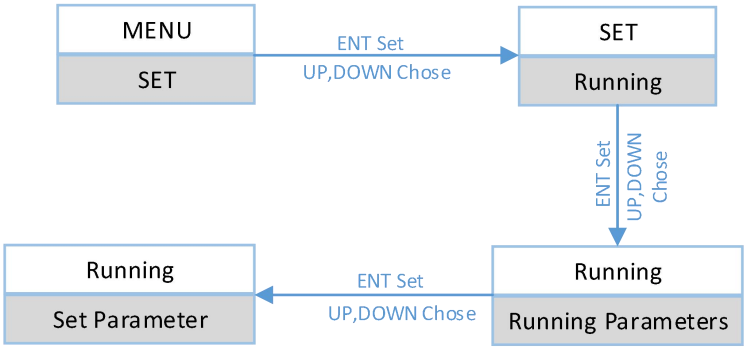

Protection

Enter the Protection setting menu, " UP/DOWN" adjust the Protection, "Enter" to choose Protection Parameter, " UP/DOWN" adjust parameter value , "Enter" to set parameter, "ESC" return, and set in order.

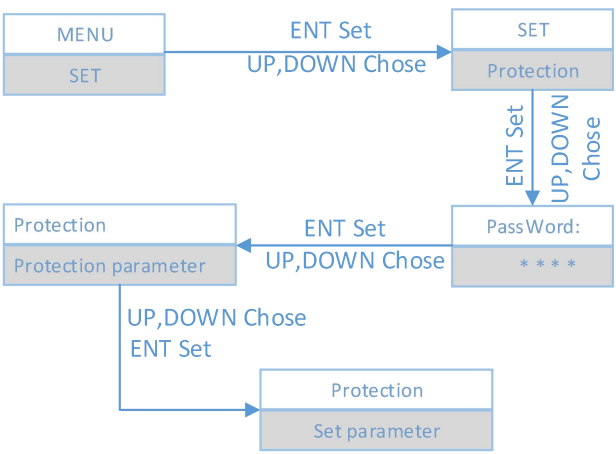

COM Address

Enter the communication address setting menu, " UP/DOWN" adjust the number size, "Enter" to confirm, "ESC" return, and set in order.

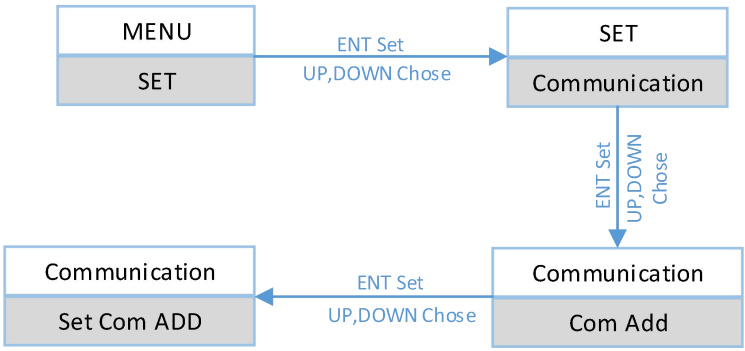

5.Commissioning

Before starting up commissioning at site, please make sure below procedures and requirements are fully meet.

- Mounting location is meet the requirements of article xxx
- All of the electrical wiring is firmly connected, including PV wiring, Grid wiring, EPS wiring, Battery wiring, Earth wiring and Meter or CT connection
- The inverter setting has been finished accordingly to local standards or regulations

Commissioning Procedures

- Turn on the AC switch between inverter grid output and the public grid;
- Turn on the DC switch of inverter PV input (if has);
- Turn on the DC switch of battery;
- Turn on the integrated DC switch on the inverter.

The inverter will enter into Standby mode and the LCD will displayed, follow the Article xxx finishing the inverter setting for the first time start up.
The inverter will enter into Running state, the Green xxx LED will on.

6.Shut Down the Inverter

6.1 Shut Down Procedures

- Turn off the integrated DC switch on the inverter;
- Turn off the DC switch of battery;
- Turn off the DC switch of inverter PV input (if has);
- Turn off the AC switch between inverter grid output and the public grid.

Note:
The inverter will be operable after minimum 5 minutes.

6.2 Restart the inverter

Follow the procedures below when the inverter needs to be restarted.

- Follow the Shut Down Procedures of Article 6 to shut down inverter;
- Follow the Commissioning Procedures of Article 5 to turn on the inverter

7.Maintenance&Trouble Shooting

7.1 Maintenance

The inverter needs maintenance periodically, the following details should be noticed.
PV connection: check the PV connection twice a year AC connection (both of Grid and EPS): check the AC connection twice a year
Battery connection: check the Battery connection twice a year
Earth connection: check the Earth connection twice a year
Heat sink: clean the heat sink once a year with dry towel

7.2 Fault Code and Trouble Shooting

The LCD and LED will report the fault when the error occurs, please follow the trouble shooting list to solve the problem.

Maintenance&Trouble Shooting

LED Indication

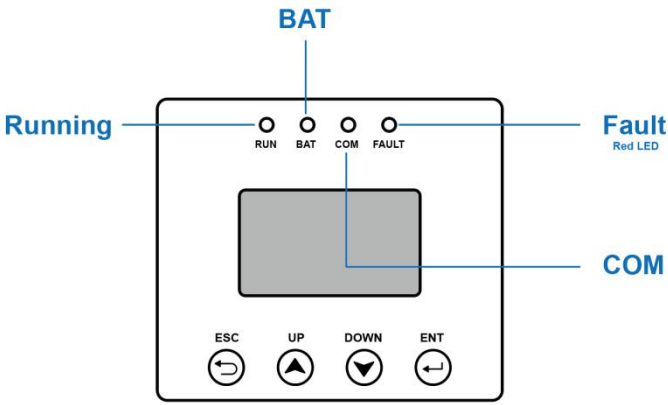

LED	Long light	Flashing	Lights off
running	Normal and EPS modes	(2Hz) Wait and Check Mod	Downtime and other conditions
BAT	Battery discharge	(1Hz) Charge	Battery standby / failure, no charge /discharge
COM	Communication between battery and inverter	(1Hz) Normal communication	Communication failed
Fault	Inverter stop work	(2Hz) Error Alarm	Trouble-free

Fault Code List and Trouble Shooting

Code	Description	Possible Reason	Recommended Solution
Bit0	Grid Loss	Grid lost	1.The inverter will restart automatically when the grid return to normal. 2.Check the AC connection of the inverter with the grid.Contact the local distributor if AC side voltage is normal.
Bit1	Grid Frequency	Grid fluctuation Grid voltage out of range Inverter fault	1.The inverter will restart automatically when the grid return to normal 2.Contact the local distributor if error persists after restarting the inverter manually.
Bit2	Grid Frequency	Grid fluctuation Grid frequency out of range Inverter fault	1.The inverter will restart automatically when the grid return to normal 2.Contact the local distributor if error persists after restarting the inverter manually.

Bit3	Rsvd1		Contact the local distributor if error persists after restarting the inverter manually multiple times.
Bit4	InvIOver	Over current protection	
Bit5	BuckBoostIOver	BuckBoost over current protection	
Bit6	ChargerIOver	Charger over current	
Bit7	Rsvd1		
Bit8	BusVOver	Bus over voltage protection	
Bit9	BuckBoostVOver		
Bit10	DICError	Over DC off-sets protection	
Bit11	GFCIOver	Over leakage current protection	
Bit12	PVVOver	PV over voltage	1. Disconnect the DC and AC switches, readjust the PV panel configuration, and reduce the input voltage 2.Contact the local distributor if error persists after restarting the inverter manually multiple times.
Bit13	Grid10MinOver	Grid volatge over within 10 minutes	1.The inverter will restart automatically when the grid return to normal 2.Contact the local distributor if error persists after restarting the inverter manually.
Bit14	ISOError	1.PV(+) or PV(-) grounding 2.Lightning strike 3.Inverter fault	1.Check resistence:PV(+) to ground and PV(-)to ground and make sure it is bigger than 2MΩ 2.Contact the local distributor if error persists after restarting the inverter manually.
Bit15	DSPOverTemp	Ambient temperature is too high because inverter exposed to sunlight seriously	1.Reduce the temperature around the machine or transfer the inverter to a lower temperature environment 2.Contact the local distributor if error persists after restarting the inverter manually.
Bit16	InvOverTemp	1. Inverter exposed to sunlight seriously 2.Ambient temperature is too high 3.Heat sink, fan clogged with foreign matter 4.Inverter fault	1.Reduce the temperature around the machine or transfer the inverter to a lower temperature environment 2.Remove foreign matter clogged in heat sink or fan 3.Contact the local distributor if error persists after restarting the inverter manually.
Bit17	EPSOverLoad	Load too big	Reduce EPS loads
Bit18	EPSIOver	Load too big	Reduce loads.There may be motor starting thus instantaneous current too big
Bit19	IslandError	Islanding because of Grid outage	Wait for the grid to recover

Bit20	FanFault	Fan is clogged with foreign matter	1.Remove the foreign matter logged in fan 2.Contact the local distributor if error persists after removing the foreign matter and restarting the inverter manually.
Bit21	ChargerVOver	Charger over current	Contact the local distributor if error persists after restarting the inverter manually multiple times.
Bit22	ConsistencyFault	Sampling circuit fault	Contact the local distributor if error persists after restarting the inverter manually multiple times.
Bit23	Rsvd2		
Bit24	Rsvd3		Wait for the inverter to repeat the self-detection, or restart the inverter
Bit25	InvISensorFault	Detection error, sensor fault	
Bit26	GFCISensorFault	Detection error, sensor fault	
Bit27	DCISensorFault	Detection error, sensor fault	
Bit28	InvRelayFault	Grid relay protection	Contact the local distributor if error persists after restarting the inverter manually multiple times.
Bit29	EpsRelayFault	EPS relay protection	
Bit30	EeromFault	1.PV input voltage unstable 2.Inverter fault	1.Inverter restart automatically after the input volatge become stable. 2.Contact the local distributor if error persists after restarting the inverter manually multiple times.
Bit31	InternalComFault	Internal communication failure	Contact the local distributor if error persists after restarting the inverter manually multiple times.

8.Specifications

Low-voltage models:

Solar Input	HNS3000HS	HNS3600HS	HNS4000HS	HNS4600HS	HNS5000HS	HNS5500HS	HNS6000HS
Max. DC Input Power (W)	6600	7600	8000	8600	9000	9600	10000
Rated DC Input Voltage (V)	360						
DC Input Voltage Range (V)	60-580						
MPPT Voltage Range (V)	50-550						
Start-up Voltage (V)	60						
Max. DC Input Current (A)	20 x 2						
Nr. of MPPT Tracker	2						
Storage Battery	**HNS3000HS**	**HNS3600HS**	**HNS4000HS**	**HNS4600HS**	**HNS5000HS**	**HNS5500HS**	**HNS6000HS**
Battery Nominal Voltage (V)	48						
Battery Voltage Range (V)	40-60						
Max. Charge/Discharge Current (A)	66						
Max. Charge/Discharge Power (W)	3000	3600	3600	3600	3600	3600	3600
Charging Curve	3 Stages						
Compatible Battery Type	Lithium-ion,Lead-Acid etc.						
Emergency Power Supply(EPS Mode)	**HNS3000HS**	**HNS3600HS**	**HNS4000HS**	**HNS4600HS**	**HNS5000HS**	**HNS5500HS**	**HNS6000HS**
EPS Nominal Output Power (VA)	3000	3600	4000	4600	5000	5500	6000
EPS Nominal Output Voltage (V)	230						
EPS Nominal Output Frequency (Hz)	50/60						
EPS Nominal Output Current (A)	13	16	17.5	20	22	24	26
Peak Output Power (W,s)	3600w,30s	4000w,30s	4600w,30s	5000w,30s	5500w,30s	6000w,30s	6500w,30s
THD(Voltage)	<1%						
Switching Time (s)	<0.01						
AC Output	**HNS3000HS**	**HNS3600HS**	**HNS4000HS**	**HNS4600HS**	**HNS5000HS**	**HNS5500HS**	**HNS6000HS**
Nominal AC Output Power (VA)	3000	3600	4000	4600	5000	5500	6000
Nominal AC Output Current (A)	13	16	17.5	20	22	24	26
Max. AC Output Current (A)	15	18.5	20	23	25.5	27.5	30
Nominal AC Voltage (V)	230						
Nominal AC Frenquency (Hz)	50 / 60						
Power Factor	Adjustable 0.9 overexcited to 0.9 underexcited						
THD(Current)	<3%						
Efficiency	**HNS3000HS**	**HNS3600HS**	**HNS4000HS**	**HNS4600HS**	**HNS5000HS**	**HNS5500HS**	**HNS6000HS**
Europe Efficiency	97.5%						
Max. Efficiency	97.9%						
Battery Charge/Discharge Efficiency	94.5%						
Protection	**HNS3000HS**	**HNS3600HS**	**HNS4000HS**	**HNS4600HS**	**HNS5000HS**	**HNS5500HS**	**HNS6000HS**
Reverse Polarity Protection	Yes	Yes	Yes	Yes	Yes	Yes	Yes
Over Current/Voltage Protection	Yes	Yes	Yes	Yes	Yes	Yes	Yes
Anti-islanding Protection	Yes	Yes	Yes	Yes	Yes	Yes	Yes
AC Short-ciruit Protection	Yes	Yes	Yes	Yes	Yes	Yes	Yes
Leakage Current Detection	Yes	Yes	Yes	Yes	Yes	Yes	Yes
Ground Fault Monitoring	Yes	Yes	Yes	Yes	Yes	Yes	Yes
Grid Monitoring	Yes	Yes	Yes	Yes	Yes	Yes	Yes
Enclosure Protect Level	IP65 / NEMA4X						
General Data	**HNS3000HS**	**HNS3600HS**	**HNS4000HS**	**HNS4600HS**	**HNS5000HS**	**HNS5500HS**	**HNS6000HS**
Dimensions [W/H/D] (mm)	450 / 580 / 176						
Weight (kg)	23						
Topology	Tranformerless(solar), HF(Battery)						
Cooling Concept	Natural Convection						
Relatively Humidity	0-100%						
Operating Temperature Range (°C)	-25~60						
Operating Altitude (m)	< 2000						
Noise Emission (dB)	< 25						
Standby Consumption (W)	< 5						
Display & Communication Interfaces	LCD, LED, RS485, Wi-Fi, CAN						
Certification & Approvals	AS 4777, VDE-AR-N4105, VDE0126, G98, G99, IEC62109-1-2, IEC62040, EN61000-6-2, EN61000-6-2, EN61000-6-3, NRS097-2-1:2017						

Specifications

High-voltage models:

Solar Input	HNS3000HS-HV	HNS3600HS-HV	HNS4000HS-HV	HNS4600HS-HV	HNS5000HS-HV	HNS5500HS-HV	HNS6000HS-HV
Max. DC Input Power (W)	6600	8000	8000	10000	10000	10000	10000
Rated DC Input Voltage (V)	360						
DC Input Voltage Range (V)	60-580						
MPPT Voltage Range (V)	50-550						
Start-up Voltage (V)	60						
Max. DC Input Current (A)	20 x 2						
Nr. of MPPT Tracker	2						
Storage Battery	**HNS3000HS-HV**	**HNS3600HS-HV**	**HNS4000HS-HV**	**HNS4600HS-HV**	**HNS5000HS-HV**	**HNS5500HS-HV**	**HNS6000HS-HV**
Battery Nominal Voltage (V)	288						
Battery Voltage Range (V)	85-360						
Max. Charge/Discharge Current (A)	30						
Max. Charge/Discharge Power (W)	6000/3000	7000/3600	8000/4000	9000/4600	10000/5000	10000/5500	10000/6000
Charging Curve	3 Stages						
Compatible Battery Type	Lithium-ion,Lead-Acid etc.						
Emergency Power Supply(EPS Mode)	**HNS3000HS-HV**	**HNS3600HS-HV**	**HNS4000HS-HV**	**HNS4600HS-HV**	**HNS5000HS-HV**	**HNS5500HS-HV**	**HNS6000HS-HV**
EPS Nominal Output Power (W)	3000	3600	4000	4600	5000	5500	6000
EPS Nominal Output Voltage (V)	230						
EPS Nominal Output Frequency (Hz)	50/60						
EPS Nominal Output Current (A)	13	16	17.5	20	22	24	26
Peak Output Power	3600w,30s	4000w,30s	4600w,30s	5000w,30s	5500w,30s	6000w,30s	6500w,30s
THD(Voltage)	<1%						
Switching Time (s)	<0.01						
AC Output	**HNS3000HS-HV**	**HNS3600HS-HV**	**HNS4000HS-HV**	**HNS4600HS-HV**	**HNS5000HS-HV**	**HNS5500HS-HV**	**HNS6000HS-HV**
Nominal AC Output Power (VA)	3000	3600	4000	4600	5000	5500	6000
Nominal AC Output Current (A)	13	16	17.5	20	22	24	26
Max. AC Output Current (A)	15	18.5	20	23	25.5	27.5	30
Nominal AC Voltage (V)	230						
Nominal AC Frenquency (Hz)	50 / 60						
Power Factor	Adjustable 0.9 overexcited to 0.9 underexcited						
THD(Current)	<3%						
Efficiency	**HNS3000HS-HV**	**HNS3600HS-HV**	**HNS4000HS-HV**	**HNS4600HS-HV**	**HNS5000HS-HV**	**HNS5500HS-HV**	**HNS6000HS-HV**
Europe Efficiency	97.5%						
Max. Efficiency	97.9%						
Battery Charge/Discharge Efficiency	94.5%						
Protection	**HNS3000HS-HV**	**HNS3600HS-HV**	**HNS4000HS-HV**	**HNS4600HS-HV**	**HNS5000HS-HV**	**HNS5500HS-HV**	**HNS6000HS-HV**
Reverse Polarity Protection	Yes	Yes	Yes	Yes	Yes	Yes	Yes
Over Current/Voltage Protection	Yes	Yes	Yes	Yes	Yes	Yes	Yes
Anti-islanding Protection	Yes	Yes	Yes	Yes	Yes	Yes	Yes
AC Short-ciruit Protection	Yes	Yes	Yes	Yes	Yes	Yes	Yes
Leakage Current Detection	Yes	Yes	Yes	Yes	Yes	Yes	Yes
Ground Fault Monitoring	Yes	Yes	Yes	Yes	Yes	Yes	Yes
Grid Monitoring	Yes	Yes	Yes	Yes	Yes	Yes	Yes
Enclosure Protect Level	IP65 / NEMA4X						
General Data	**HNS3000HS-HV**	**HNS3600HS-HV**	**HNS4000HS-HV**	**HNS4600HS-HV**	**HNS5000HS-HV**	**HNS5500HS-HV**	**HNS6000HS-HV**
Dimensions [W/H/D] (mm)	450 / 580 / 176						
Weight (kg)	22						
Topology	Tranformerless(solar), HF(Battery)						
Cooling Concept	Natural Convection						
Relatively Humidity	0-100%						
Operating Temperature Range (°C)	-25~60						
Operating Altitude (m)	< 2000						
Noise Emission (dB)	< 25						
Standby Consumption (W)	< 5						
Display & Communication Interfaces	LCD, LED, RS485, Wi-Fi, CAN						
Certification & Approvals	AS 4777, VDE-AR-N4105, VDE0126, G98, G99, IEC62109-1-2, IEC62040, EN61000-6-2, EN61000-6-2, EN61000-6-3, NRS097-2-1:2017						

Meter

Afore Meter

Parameter		
Type	TAPM-50KW	SAPM-10KW
AC power	50KW	10KW
Max AC Power	55KW	11KW
Degree of accuracy	1%	1%
AC Rating rvoltage	230/400V	230V
AC voltage range	320-440V	184-253V
AC Rating current	72.5A	43.5A
Max AC current	80A	60A
Rating frequency	50/60Hz	50/60Hz
Frequency range	45-65Hz	45-65Hz
Grid type	3P+N	L+N
Communication	RS485	RS485
Dimmension(W,L,H)	70 x 100 x 65 mm	30 x 100 x 65 mm
Enclosure	IP20	IP20
Installation	35mm rail	35mm rail