Hybrid Inverter

AF3K-DH, AF3.6K-DH, AF4K-DH, AF4.6K-DH, AF5K-DH, AF5.5K-DH, AF6K-DH, AF7K-DH, AF7.6K-DH, AF8K-DH, AF8.6K-DH, AF9.6K-DH

Installation and Operation Manual

Afore

Afore New Energy Technology (Shanghai) Co., Ltd.

Contents

Contents..... 1

1.About This Manual..... 3

1.1 Scope of Validity..... 3
1.2 Target Group..... 3

2.Safety Guidance..... 3

2.1 Safety Instruction..... 3
2.2 Symbols..... 4

3.Introduction..... 4

3.1 Basic Instruction..... 4
3.2 Operation Modes..... 5
3.2.1 Self- use..... 5
A. Normal Mode..... 5
B. Stabilize the Power of the Grid..... 5
3.2.2 Timing Charging..... 6
3.2.3 Selling First..... 6
3.2.4 Backup First..... 7
3.2.5 Emergency Charging..... 7
3.2.6 EPS..... 8

4.Installation..... 8

4.1 Pre-installation..... 8
4.1.1 Packing List..... 8
4.1.2 Exterior Objects..... 9
4.1.3 Mounting Location..... 10
4.1.4 Tools Required for Installation..... 12
4.2 Mounting..... 13
4.3 Electrical Connection..... 14
4.3.1 Communication..... 14
4.3.1.1 Adaptation Switch..... 15
4.3.1.2 BAT/Meter/CT..... 15
4.3.1.3 Multi Inverter Parallel 19
4.3.1.4 WIFI/GPRS/LAN..... 20
4.3.1.5 BAT-CAN/NTC..... 20
4.3.1.6 DRM(Demand Response Mode)..... 22
4.3.2 PV Connection..... 22
4.3.3 Battery Connection..... 23
4.3.4 AC Connection..... 24
4.3.5 Earth Connection..... 28

5.Operation..... 28

5.1 Control Panel..... 28
5.2 Menu Overview..... 29
5.3 Setting..... 30
5.3.1 Time..... 30
5.3.2 Safety..... 30
5.3.12 PV Mode..... 31
5.3.4 Lithium Battery..... 31
5.3.5 Lead Acid..... 32
5.3.6 Energy Management System..... 32
5.3.7 Timing Charging&Discharging..... 33
5.3.8 AC Timing Charging..... 33
5.3.9 Forced Charging..... 34
5.3.10 Forced Discharging..... 34
5.3.11 Meter&CT..... 35
5.3.12 Protection Parameters..... 35
5.3.13 Communication Parameters..... 36

6. Power ON/OFF..... 36

6.1 Power ON..... 37
6.2 Power off..... 37
6.3 Restart..... 37

7.Maintenance&Trouble Shooting..... 37

7.1 Maintenance..... 37
7.2 Trouble Shooting..... 37

8. Specifications..... 48

1.About This Manual

1.1 Scope of Validity

This manual mainly describes the product information, guidelines for installation, operation, maintenance and troubleshooting. And this manual applies to Afore AF-DH series hybrid inverters.

AF 3K-DH	AF 3.6K-DH	AF 4K-DH,	AF 4.6K-DH	AF 5K-DH	AF 5.5K-DH
AF 6K-DH	AF 7K-DH	AF 7.6K-DH	AF 8K-DH	AF 8.6K-DH	AF 9.6K-DH

Please keep this manual stored carefully and accessible at any time.

Contents may be updated due to product development, the latest version can be acquired via www.aforenergy.com.

1.2 Target Group

This manual and the tasks described are for qualified electricians.

2.Safety Guidance

2.1 Safety Instruction

- All the work on AF-DH series should be carried out by qualified electricians. Children will not access to the inverter.
- The PV (Photovolatic) modules and the hybrid inverters should be connected to the ground separately in order to protect property and persons.
- Do not touch cover until five minutes after disconnecting PV panels, battery, the grid, and generator to avoid electric shock.
- To reduce the risk of injury, do not touch the hot cover, heat sink at the back of the hybrid inverter or surfaces nearby while inverter is operating.
- Do not use the inverter for other purposes that not described in this manual.
- Both the inverter and associated transport packaging are mainly made of recyclable raw materials. Please ensure that the used device and relevant accessories have been disposed of in accordance with applicable regulations.
- Packed with EPE foam and carton, the inverter should be placed upwards and handled carefully during delivery. Pay attention to waterproof.
- Alternative applications, modifications to the inverter are not recommended. Installation of components that is not authorized by Afore New Energy will make the warranty claims invalid.

2.2 Symbols

AF-DH series hybrid inverters strictly comply with relevant safety standards. Please read and follow all the instructions and cautions before installation, operation and maintenance.

IEEE	Institute of Electrical and Electronics Engineers （IEEE）
	Canadian Standards Association （CSA）
	Underwriters Laboratories Inc （UL）
	California Energy Commis-sion (CEC List)
	Observe enclosed documentation.
	Danger of high voltage. Danger to life due to the high voltages in the inverter.
5 min	Danger of high voltage. Residual voltage in the inverter need 5min to discharge, wait 5min before operation.
	Beware of hot surface. The inverter can be hot during operating, avoid contact during operating.

3.Introduction

3.1 Basic Instruction

AF-DH series hybrid inverters, when work with batteries can significantly reduce the energy that purchased from the public grid and optimize self-consumption.

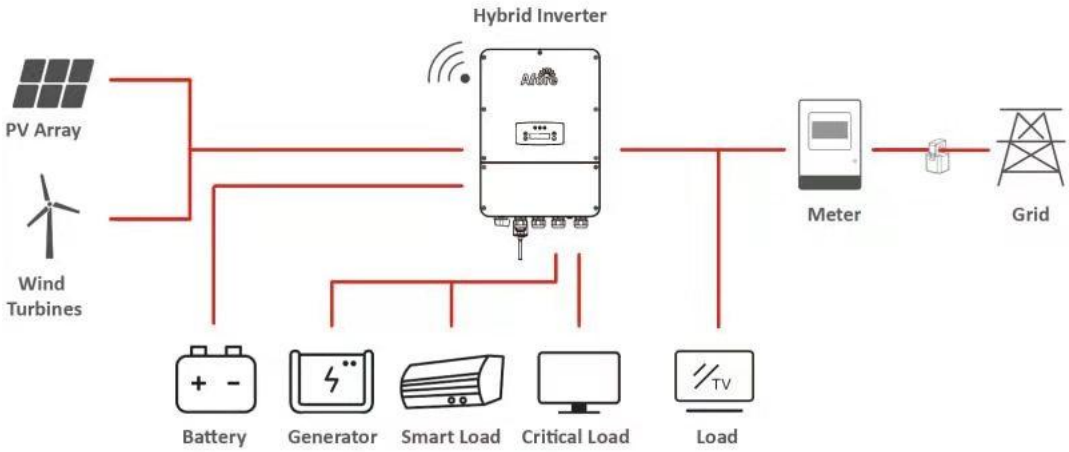

1. Solar energy system can work without PV or Battery.
2. Off-grid application is available.
3. With anti-feed-in (default value 0).

3.2 Operation Modes

3.2.1 Self- use

A. Normal Mode

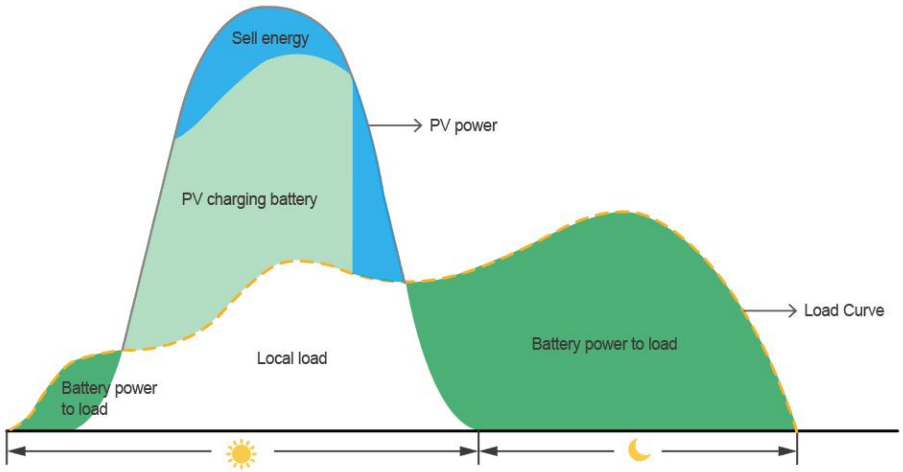

Priority: Load > Battery > Grid

This mode applies to situation that with low feed in subsidy and high electricity price.

1. Solar energy supply to the local load and charge to the battery first.
2. The excess power export to the public grid.
3. The wind turbines can be connected to the PV.
4. When off gird and the power is lacking, the generator will be turned on automatically.

B.Stabilize the Power of the Grid

In special self-use mode, the power needs to be fed in/exported from the grid stably with a target value(default value 0), thus keeping grid-friendly in some areas.

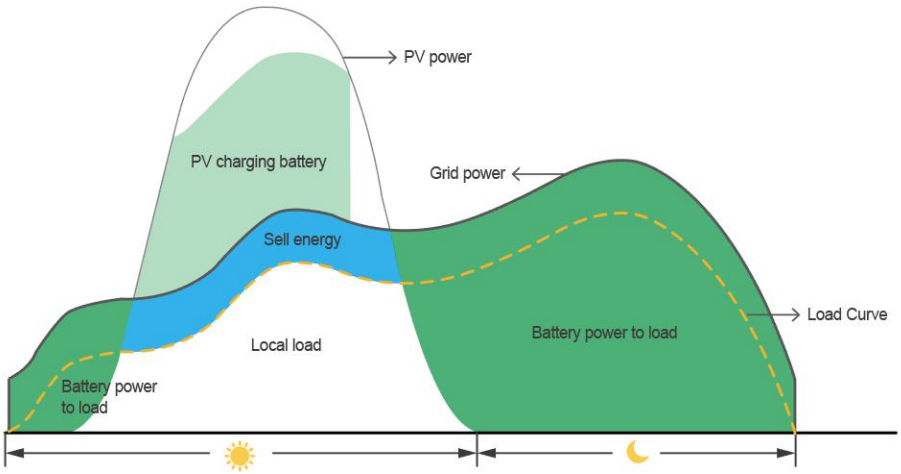

3.2.2 Timing Charging

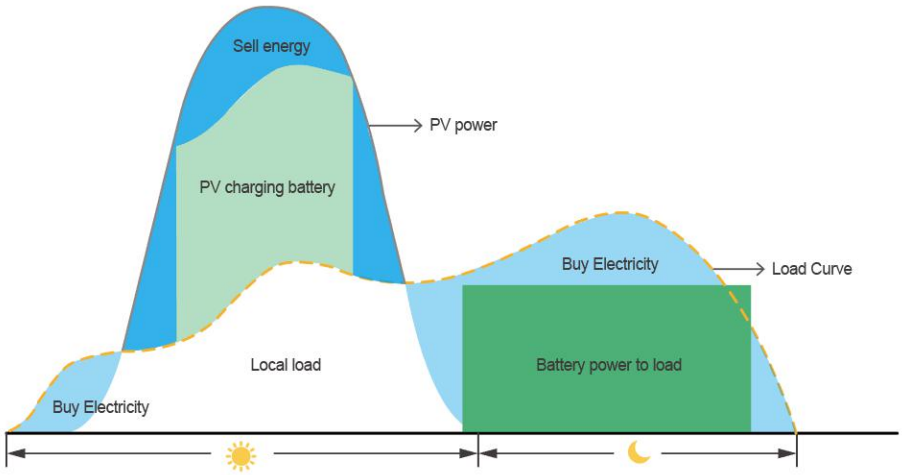

This mode applies to situation with peak-valley electricity price. Battery can be charged during off-peak hours.

The charging and discharging time can be set flexibly, it also allows to set whether charge from the grid or not.

3.2.3 Selling First

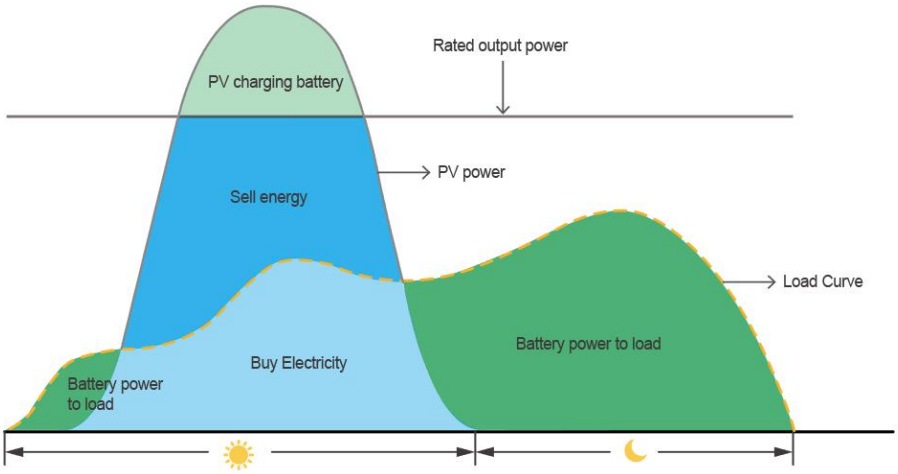

Priority: Load > Grid > Battery
This mode applies to situation with high feed in subsidy.

1. Solar energy supply the local load first, then export to the public grid.
2. The excess energy will be charged into the battery.

3.2.4 Backup First

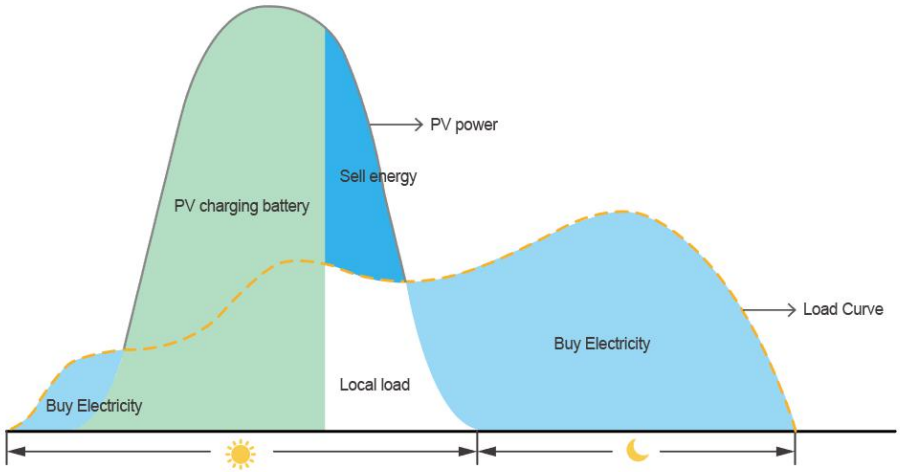

Priority: Battery > Load > Grid
This mode applies to situation with frequent power outages. When the public grid is off, enough energy can be supplied to the local load by the batteries.

Battery will be charged first, and discharge energy for the local load when the grid is off. It would be charged automatically.

3.2.5 Emergency Charging

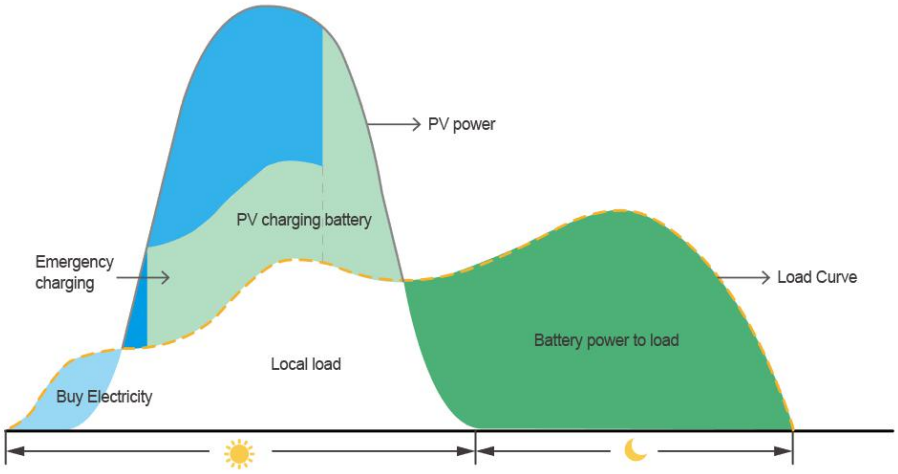

When the voltage or SOC (state of charge) of the battery is below the safe value, battery will be charged in priority until to the safe value.
The energy of the battery will be taken from the public grid and PV system. When the public grid is off, the battery can only be supplied by PV system.

3.2.6 EPS

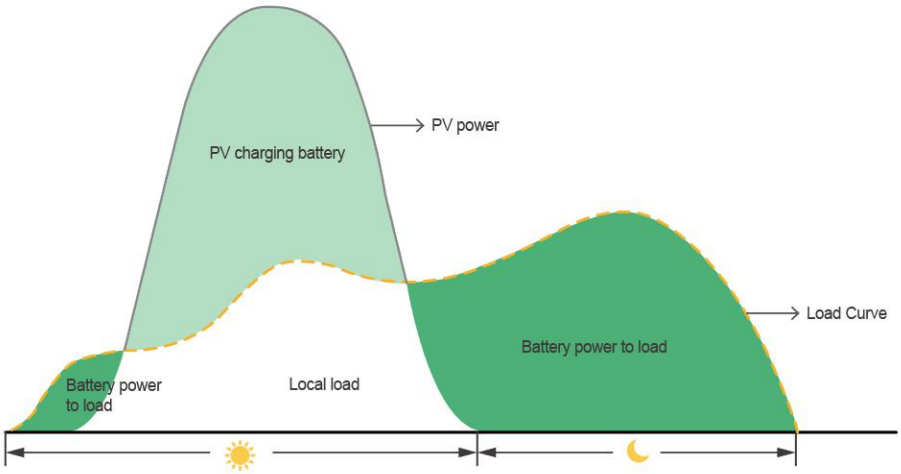

When the grid is suddenly off or abnormal, inverter will change to off grid status automatically. Energy from PV system and battery will supply the local load.

4.Installation

4.1 Pre-installation

Check the equipment before installation to make sure whether the packaging and components are lost or damaged, if it is, please contact local distributor directly for support.

4.1.1 Packing List

Please ensure the following items are included in the packaging with your machine.

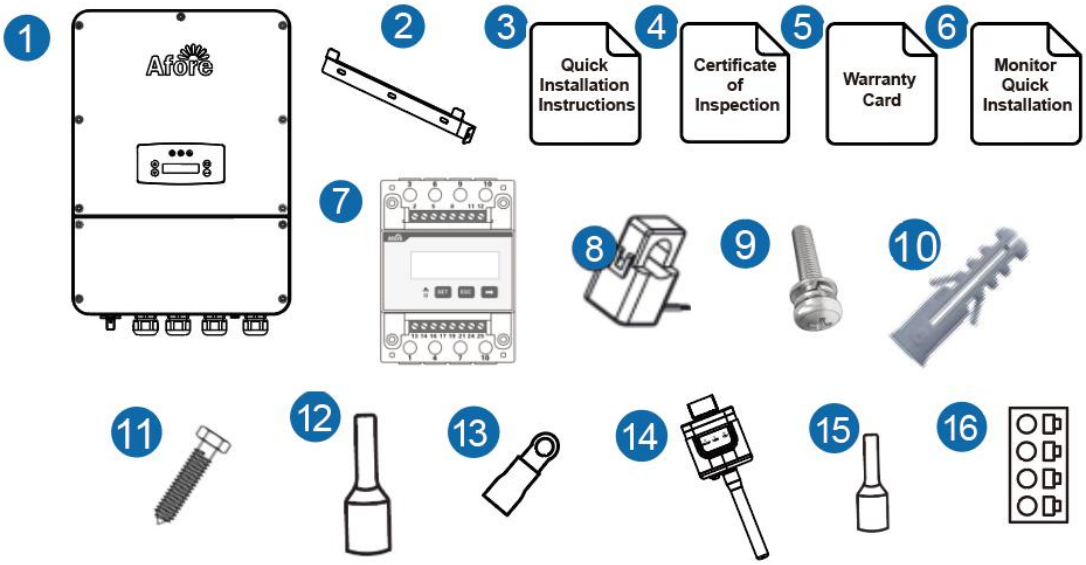

No.	Qty	Item	No.	Qty	Item
1	1	Hybrid Inverter	9	1	Security Screw
2	1	Wall Mounting Bracket	10	8	Expansion Tube
3	1	Quick Installation Instructions	11	8	Backet Screw
4	1	Inspection Certificate	12	2	Battery Terminals
5	1	Warranty Card	13	1	Earth Terminals
6	1	Monitor Quick Installtion	14	1	Monitor Module
7	1	Smart Meter (Opitional)	15	15	Power Connectors
8	2	CT	16	5	Communication Connectors

4.1.2 Exterior Objects

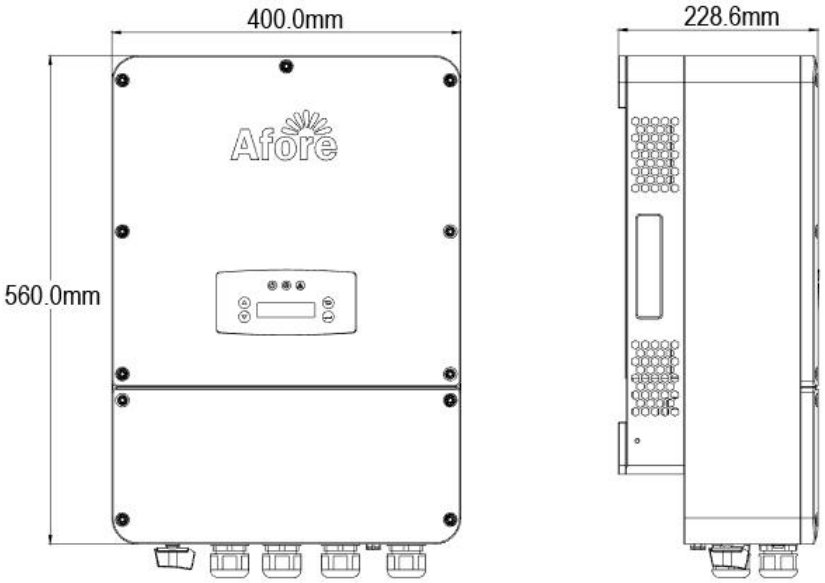

Hybrid Inverter Terminals

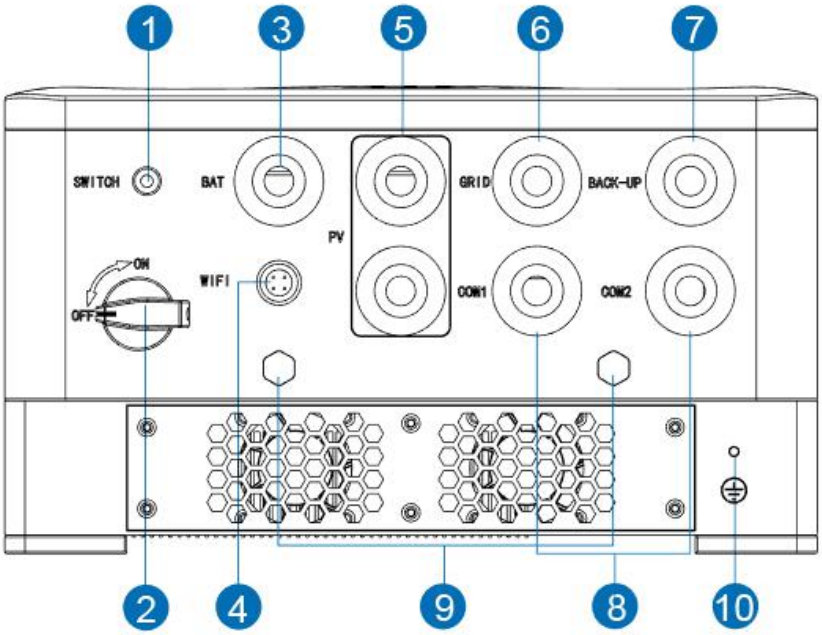

No.	Item	No.	Item
1	Emergency Stop	6	Grid Port
2	DC Switch	7	Back Up
3	Battery Port	8	Communication Port
4	Wifi Port	9	Waterproof Ventiating Valve
5	PV Port	10	Earth Screw

4.1.3 Mounting Location

AF-DH series hybrid inverters are designed for indoor and outdoor installation (IP65), make sure the mounting location meets the following conditions :

- Inverters should be installed on a solid surface
- Inverters should be away from flammable materials, the television antenna or antenna cable
- The mounting structure can support the weight of the inverter.
- The ambient temperature should be within -25℃ ~ 60℃.
- Please AVOID direct sunlight, rain exposure, snow laying up and lightning

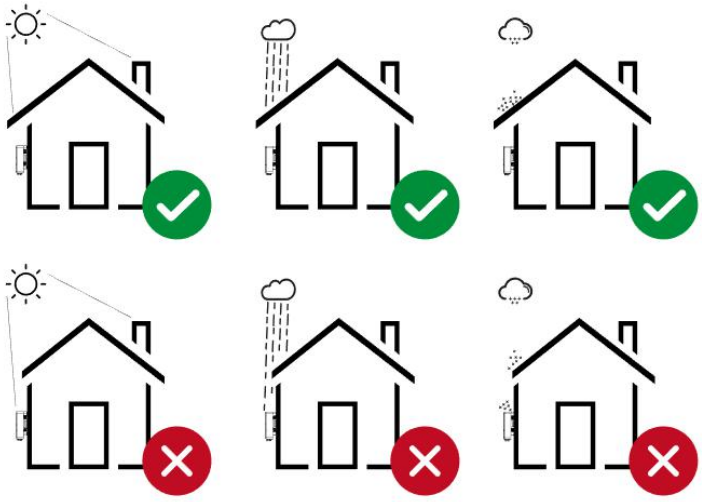

- Inverters should be installed vertically on the wall, or lean back on plane with a limited tilted angle. Please refer to following figure.

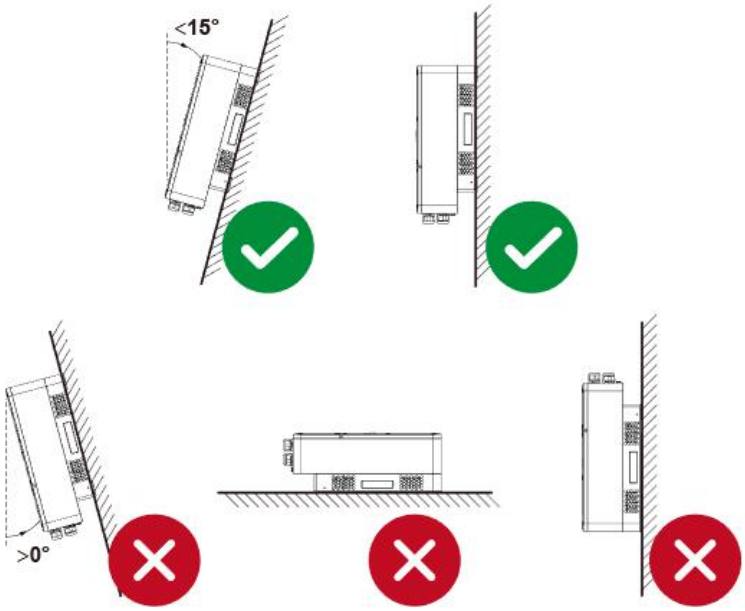

- Keep enough space for sufficient heat dissipation, convenient operation and maintenance.

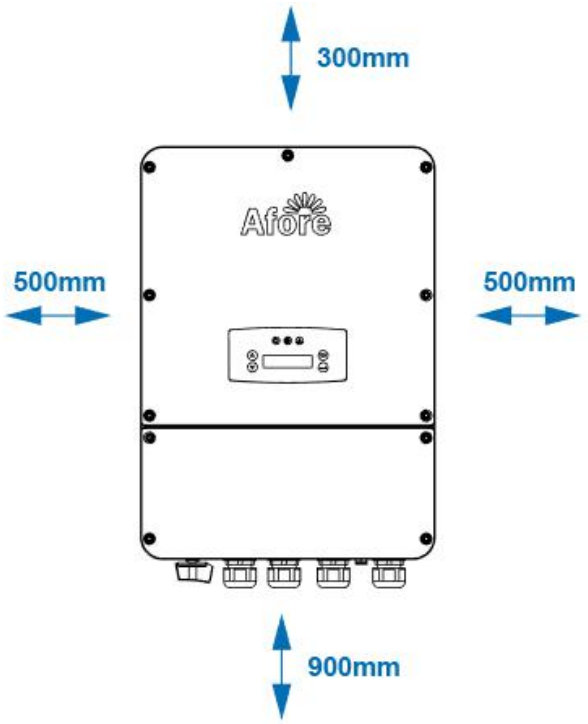

- Inverters should be installed at suitable height for convenient maintenance.

4.1.4 Tools Required for Installation

To install the inverter properly, the following tools need to be prepared.

No.	Name	Remarks
1	Mark Pen	Mark the punching position
2	Spanner	
3	Screwdriver	
4	Wire stripper	Crimp Earth Terminals
5	Wire Cutter	
6	Power Drill	
7	Hammer	
8	Crimping Pliers	

4.2 Mounting

Step 1

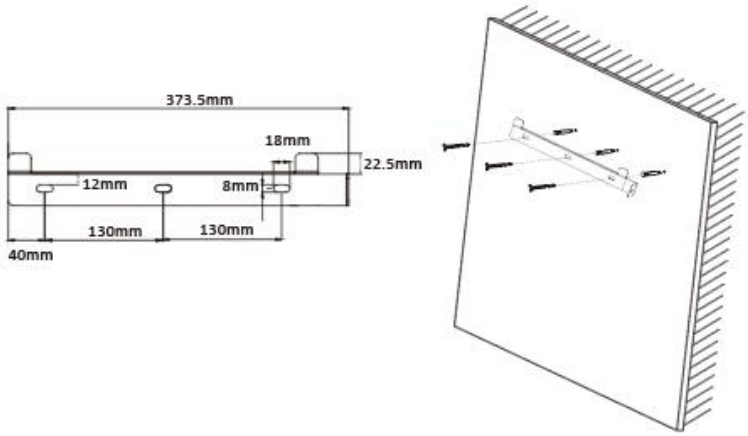

Step 2

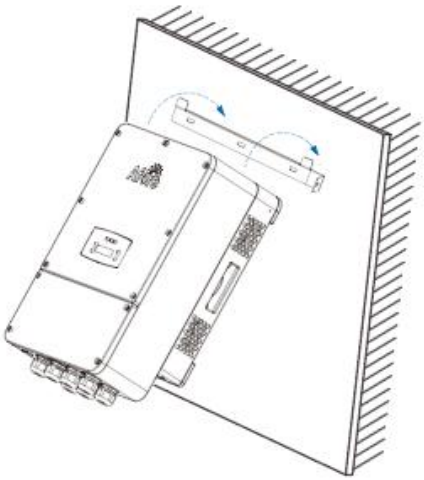

Step 3

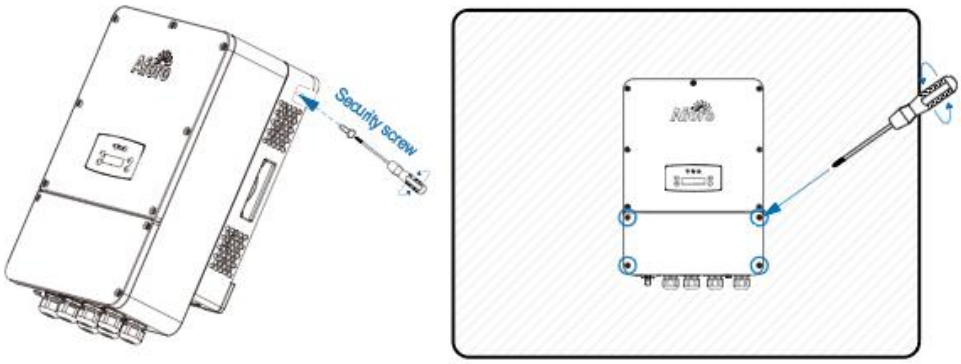

4.3 Electrical Connection

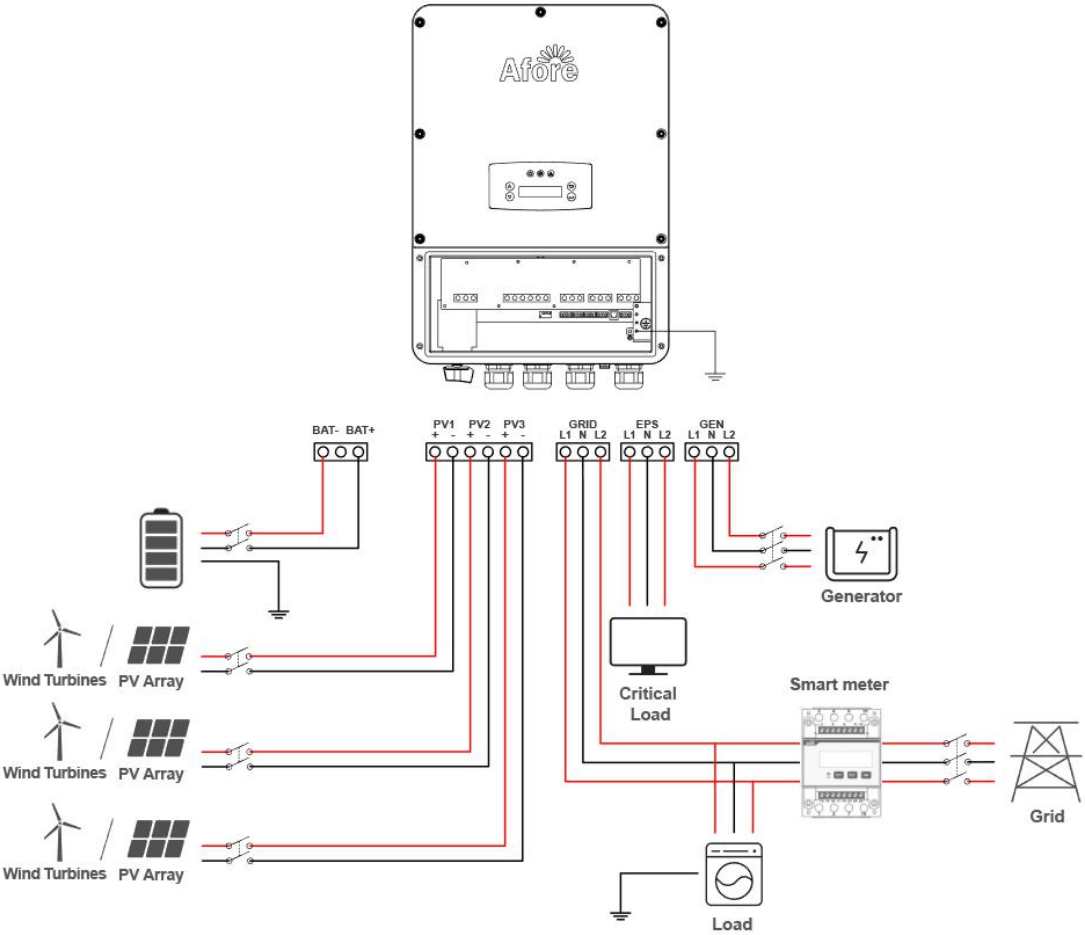

4.3.1 Communication

Communication terminals and configured switches on the bottom of the inverter:

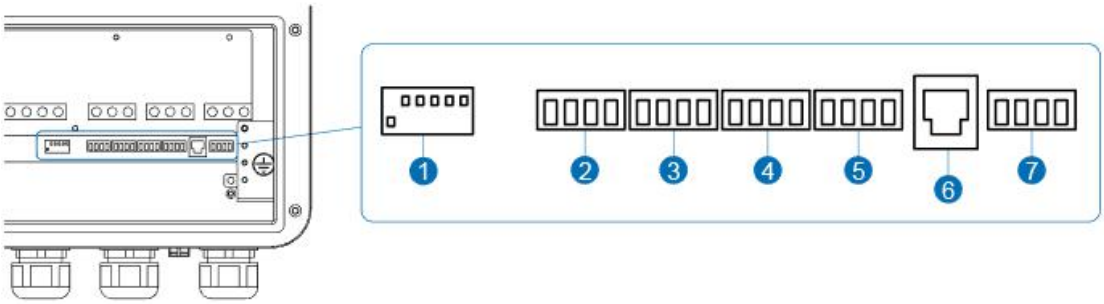

No.	Item	Switch
1	Communication Terminals	Switch
2		BAT 485/Meter
3		NTC/BAT CAN
4		RS485
5		CT1/CT2
6		DRM
7		Dry Contact

4.3.1 .1 Adaptation Switch

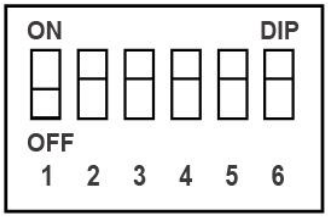

S1 Adaptation Switch	Remarks
Emergency Switch(default off)	OFF
CAN-BAT	ON
CT485	ON
BAT485	ON
RS485-2	ON
RS485-WIFI	

4.3.1.2 BAT/Meter/CT

Meter and a current sensor(CT for short below) are used to detect current power direction of the local load and the grid. The output control function of the inverters will be activated based on the detected data.

Note:
Make sure AC cable is totally isolated from AC power before connecting Smart Meter & CT.

One meter and 2pcs CT used for one hybrid inverter.

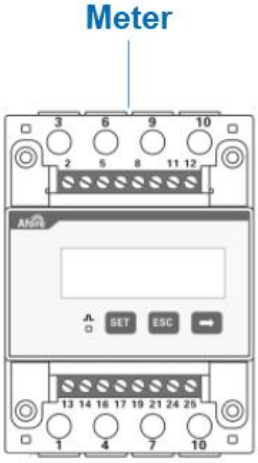

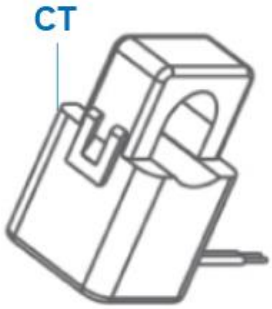

Step 1 Install the Meter

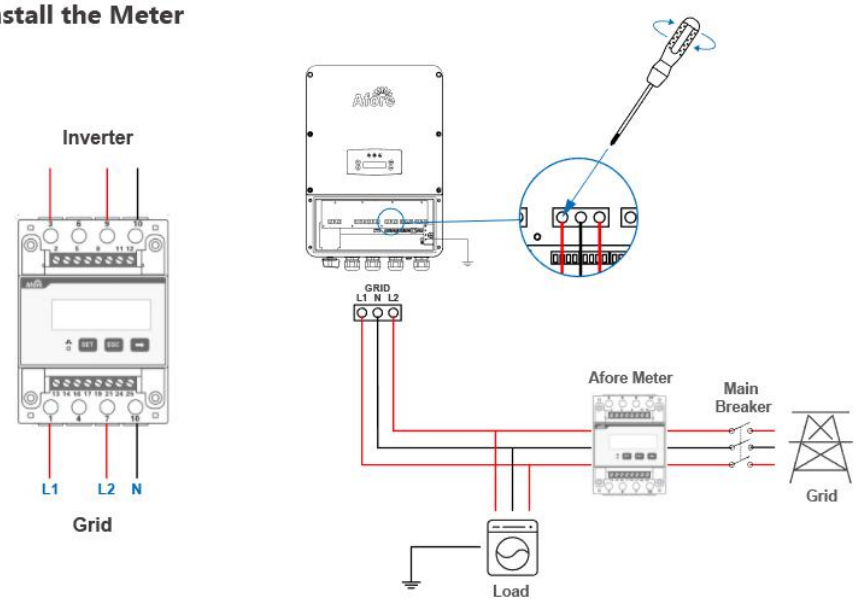

Step 2 Connect the Meter to the inverter

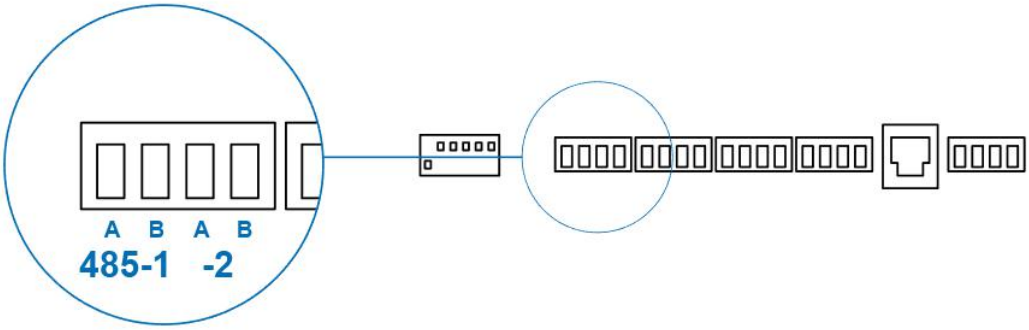

The Meter Communication port

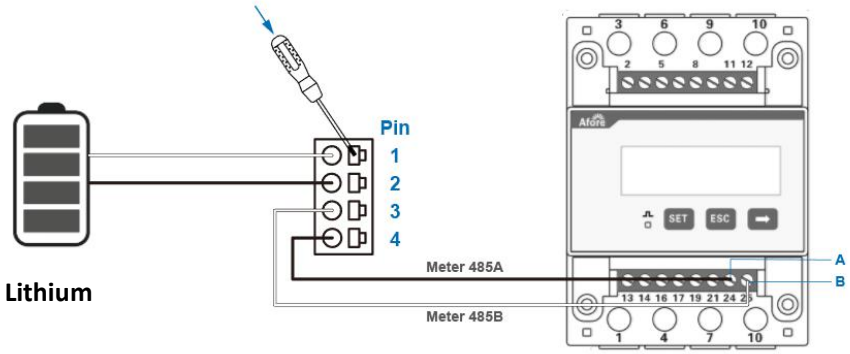

Pin	BAT&Meter 485
1	BAT 485A
2	BAT 485B
3	Meter 485A
4	Meter 485A

Connect the meter with the inverter

With negative value, the hybrid inverters is feeding power to the grid.

With positive value, the load is consuming the power from grid.

With below figures and “Imp.”, the system is importing active energy.

With below figures and “Exp.”, the system is exporting active energy.

Step 1 Install the CT

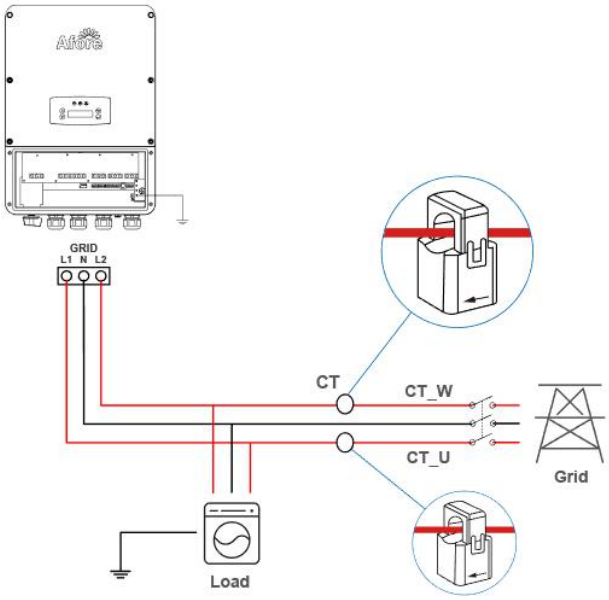

Step 2 Connect the CT to the inverter

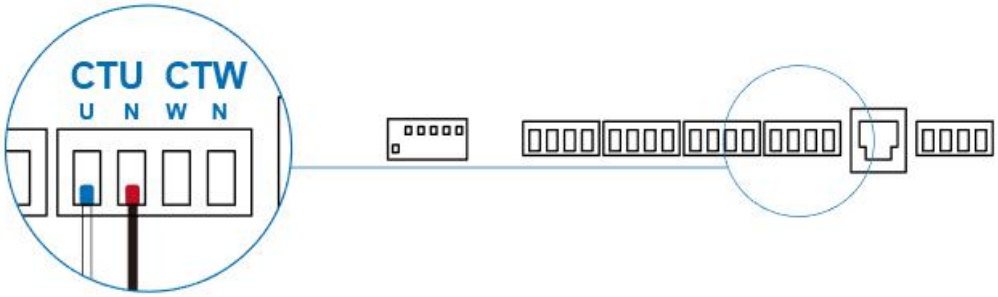

The CT Communication port

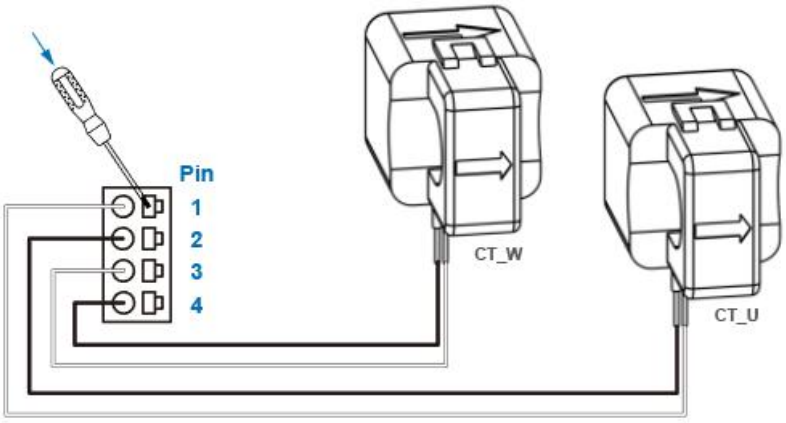

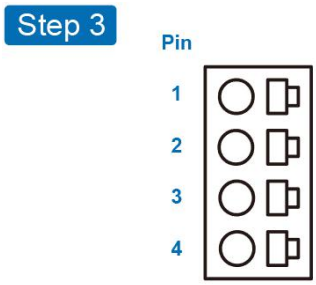

Pin	CT-AC/Meter
1	CT_U
2	CT_N
3	CT_W
4	CT_N

Meter Pin definition

4.3.1.3 Multi Inverter Parallel

RS485-3 connector is for Multi inverter parallel communication connection. Please check with local distributor or Afore for more information.

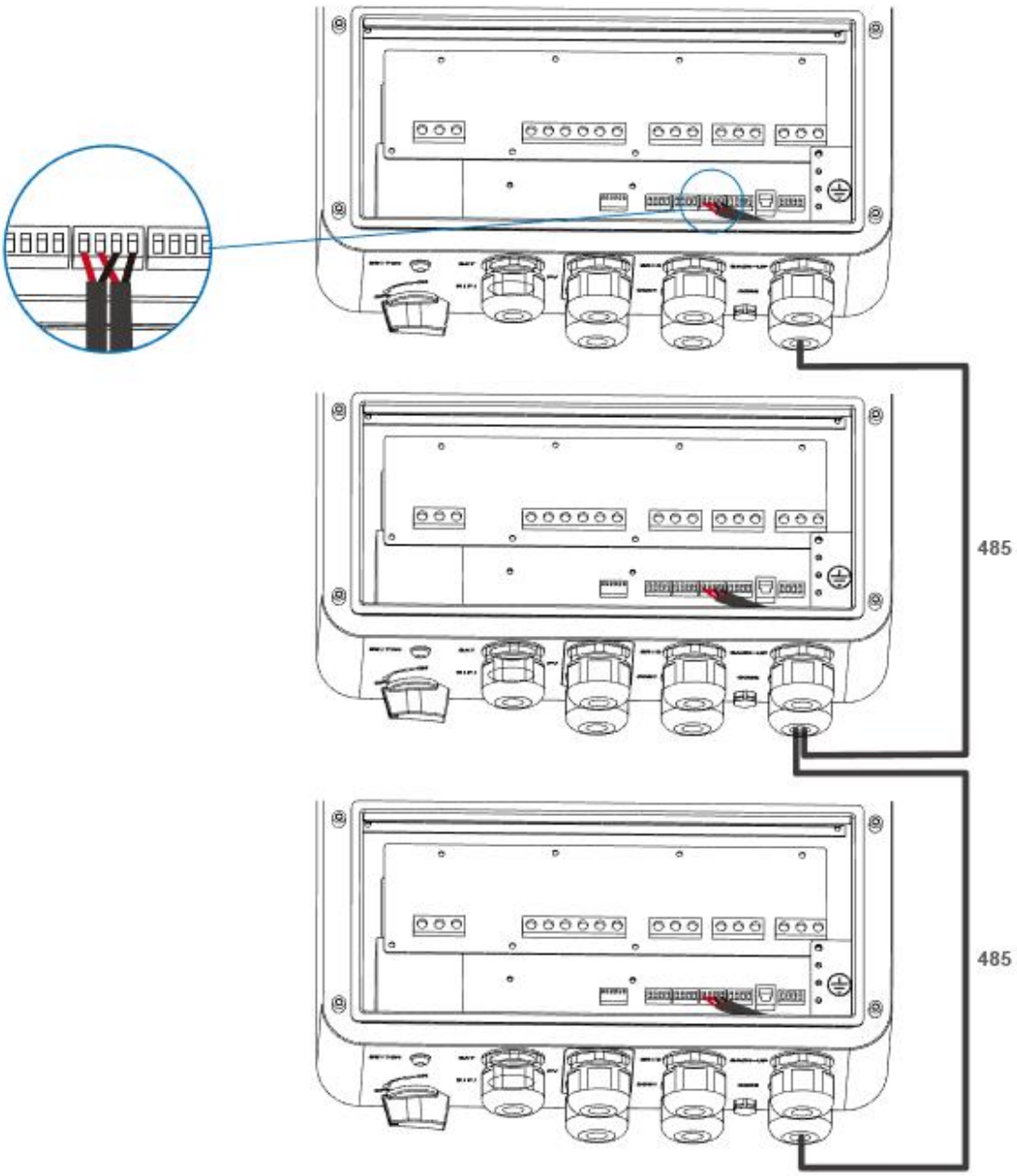

4.3.1.4 WIFI/GPRS/LAN

The WiFi/GPRS/LAN module could transmit data to cloud server, and display data on PC (personal computer), tablet and smart-phone.

Install the WiFi/GPRS/LAN to the hybrid inverter

- Turn on the AC power supply and the AC breaker, until the LED indicator on the **WiFi/GPRS/LAN** module flashing.

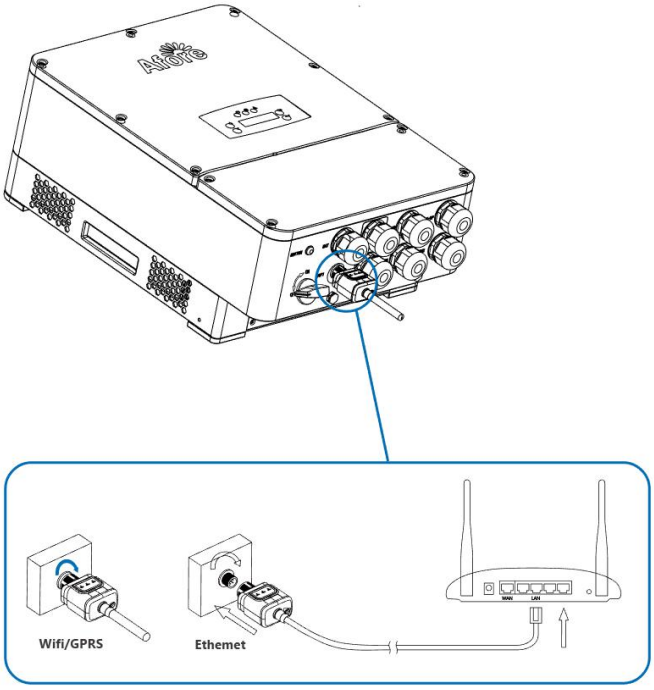

- Setting the communication module, router, account registration, etc.

For more information, please check the WIFI/GPRS/LAN connection manual via www.aforenergy.com.

4.3.1.5 BAT–CAN/NTC

NTC is a temperature sensor, which is installed on the surface of the lead-acid battery by connecting the lead wire to the TEP terminal of the inverter. If inverter is connected with lithium battery, it supports communication CAN & RS485, communication connecting steps please refer to Chapter 4.4.2.

Connecting steps of the lead-acid battery or lithium battery to the inverter please refer to Chapter 4.3.2.

Step 1

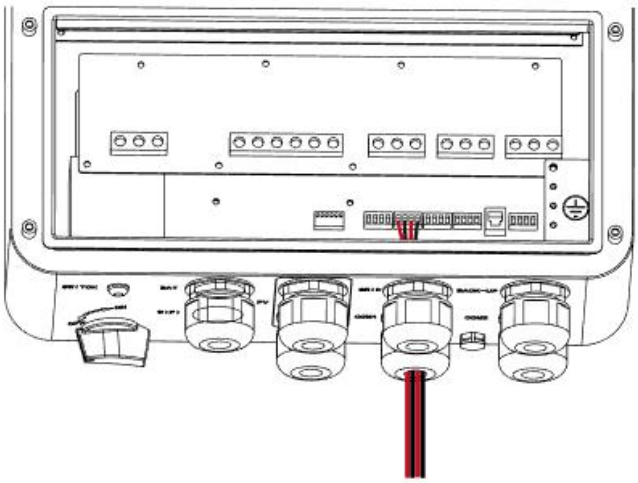

Step 2

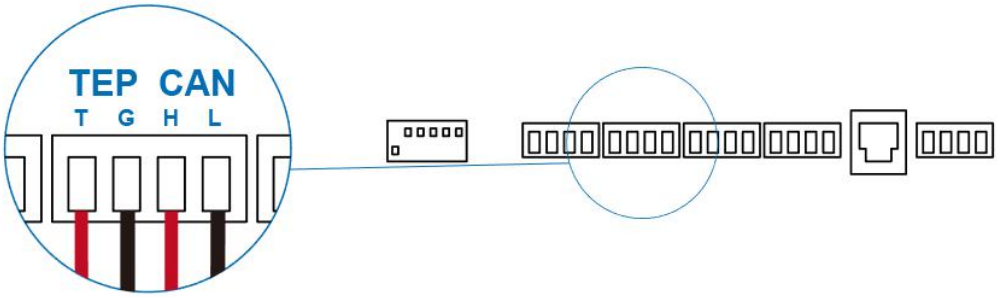

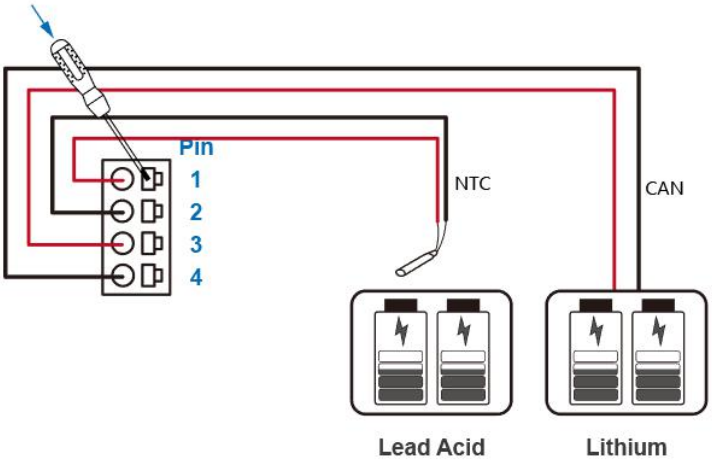

Pin	BAT NCT&CAN
1	TEP T
2	TEP G
3	CAN H
4	CAN L

Note:
NTC (temperature sensor): Lead Acid
CAN: Lithium
NTC: temperature sensors

4.3.1.6 DRM(Demand Response Mode)

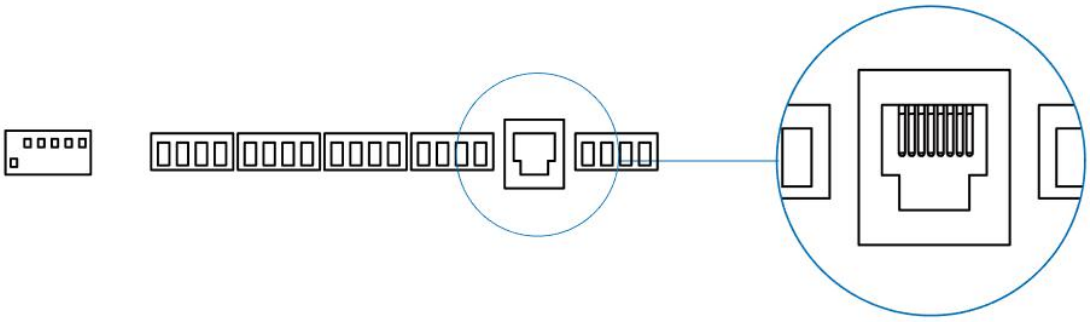

Pin	DRM
1	DRM1/5
2	DRM2/6
3	DRM3/7
4	DRM4/8
5	REF/GEN/0
6	3.3V
7	/
8	/

4.3.2 PV Connection

The AF-DH series hybrid inverters up to three MPPT channels, can be connected with three strings of PV panels. Please make sure below requirements are followed before connecting PV panels and strings to the inverter:

- Disconnect all the PV (DC) switches before wiring
- The open-circuit voltage and short-circuit current of PV string should not exceed the reasonable range of the inverters
- The isolation resistance between PV string and ground should exceed 300 kΩ
- The polarity of PV strings are correct
- Use the DC plugs in the accessory box

Step 1

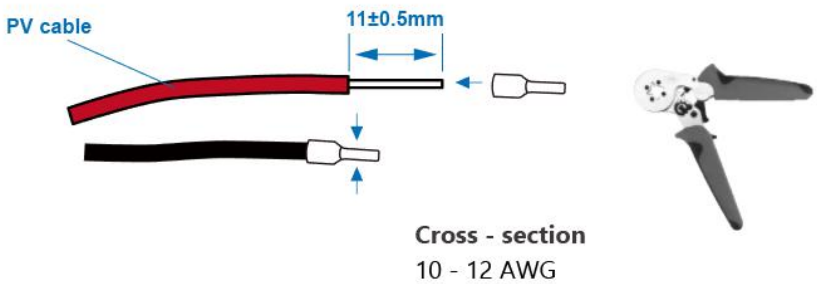

Step 2

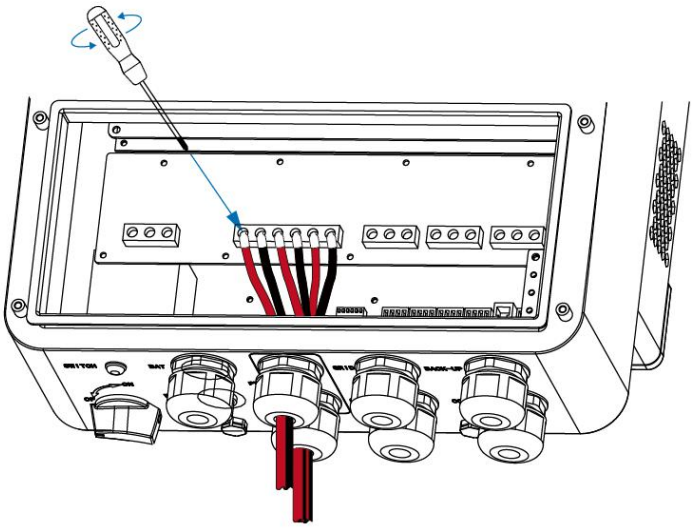

- PV input wire ≥ 8AWG, stripping length 11±0.5mm, the stripped PV input wire should be tightly crimped into the connectors.
- Pass the PV input wire with crimped terminals through the waterproof connector and follow the system connection diagram as shown above, insert the black wire PV1-, PV2-, PV3- and the red wire PV1+, PV2+, PV3+ into the terminals on the PCB, and tighten the screws.

Warning:
The fatal high voltage may on the PV string, please comply with electric safety in Chapter 2.0 when connecting.
Please make sure the right polarity of PV strings, otherwise inverter could be damaged.

4.3.3 Battery Connection

AF-DH series hybrid inverters are compatible with lithium battery. For lead acid battery or batteries with other brands, please confirm with local distributor or Afore for technical support.

Note:
Set battery type and manufacturer, please refer to Chapter 5.3.

BMS(Battery Management System)communication is needed between inverter and battery.

Step 1

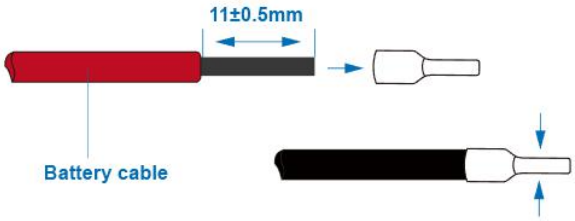

Note:
Battery cable suggestion

Cross - section
6 - 8 AWG

Note:
Please make sure the battery polarities are correct.

Step 2

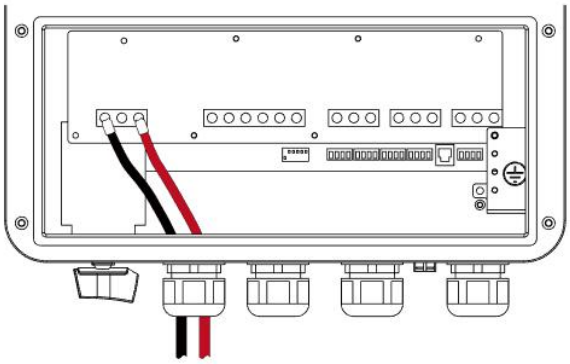

4.3.4 AC Connection

There are three AC terminals marking with "GRID", "EPS" and "GEN".

Before connecting, a separate AC breaker between individual inverter and AC input power is necessary. This will ensure the inverter be securely disconnected during maintenance and fully protected from current of AC input.

An extra AC breaker is needed for On-Grid connection to be isolated from grid when necessary. Below are requirements for the On-Grid AC-breaker.

Inverter Model	AC breaker specification
AF3.0K-DH~AF7.6K-DH	63A/240V/208V AC breaker
AF8.0K-DH~AF9.6K-DH	100A/240V/208V AC breaker

Note:
Qualified electrician will be required for the wiring.

Model	Wire Size	Cable（mm^2）	Torque value
6/9.6kW	8-10AWG	6-8	1.2Nm

AC Cable Size

Please follow steps for AC connection

- Connect DC protector or breaker first before connecting.
- Remove insulation sleeve 11mm(0.5 inch) length, unscrew the bolts, insert the AC input wires according to polarities indicated on the terminal block and tighten the terminal screws.

Note:
Make sure the wires are complete connected.

Grid Connection

Step 1

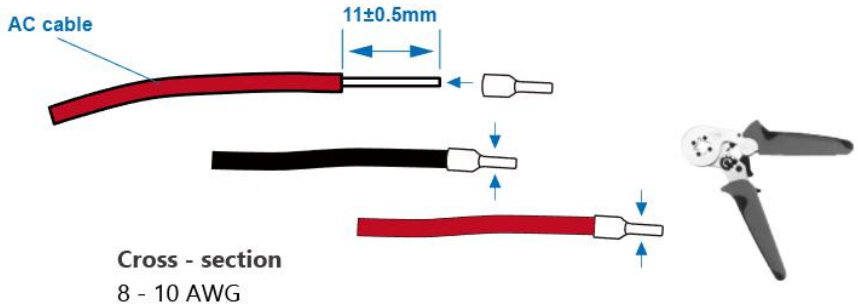

Step 2

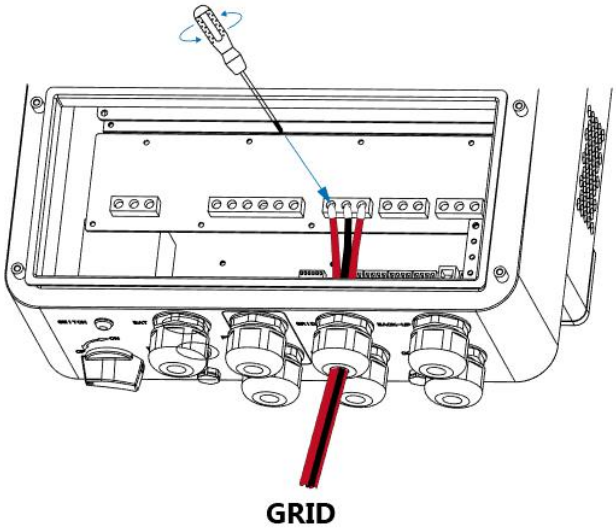

Note:
Make sure that AC power source is disconnected before connection.

EPS Connection

Step 1

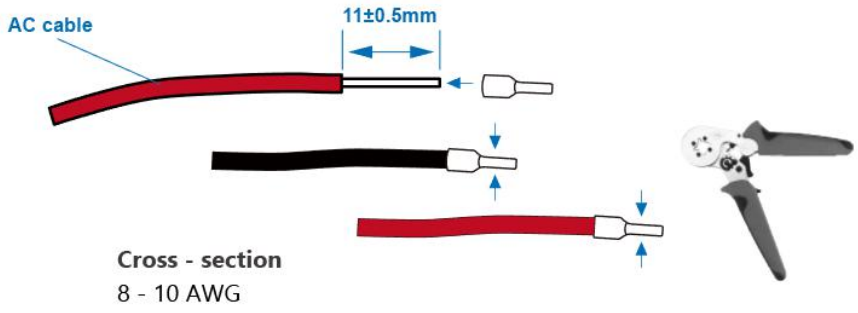

Step 2

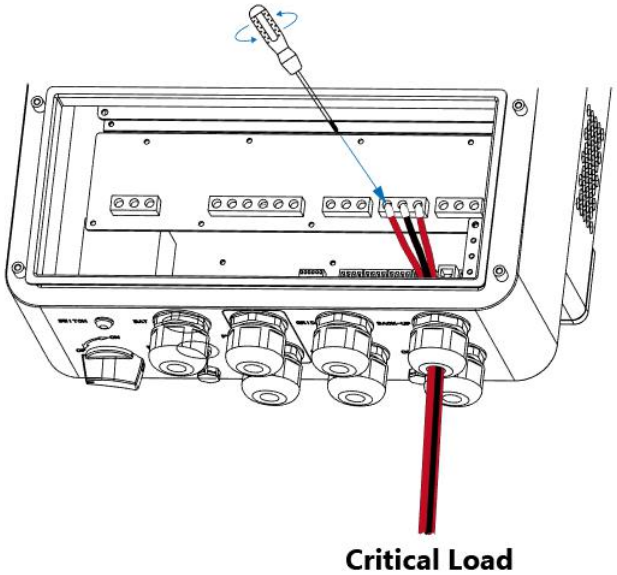

Generator Connection

Step 1

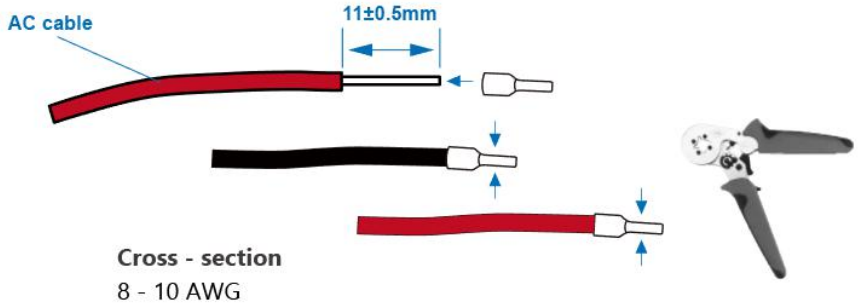

Step 2

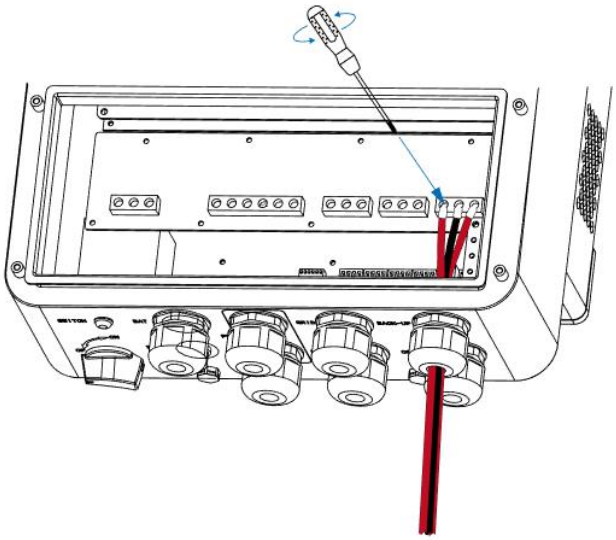

Generator

- Then, insert stripped AC output wires into the terminal block according to polarities indicated and tighten the terminal. Corresponding N wires and PE wires to the AC terminal should be inserted as well.

Note:
Make sure the wires are securely connected.

4.3.5 Earth Connection

A second protective earth (PE) terminal should be connected to the inverter. This prevents electric shock if the original protective PE wire fails.

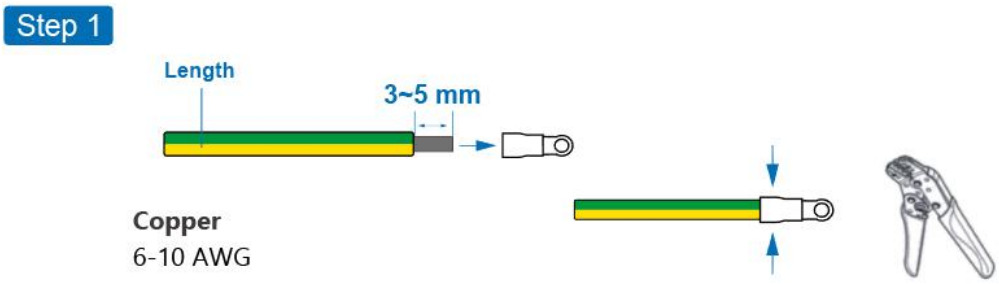

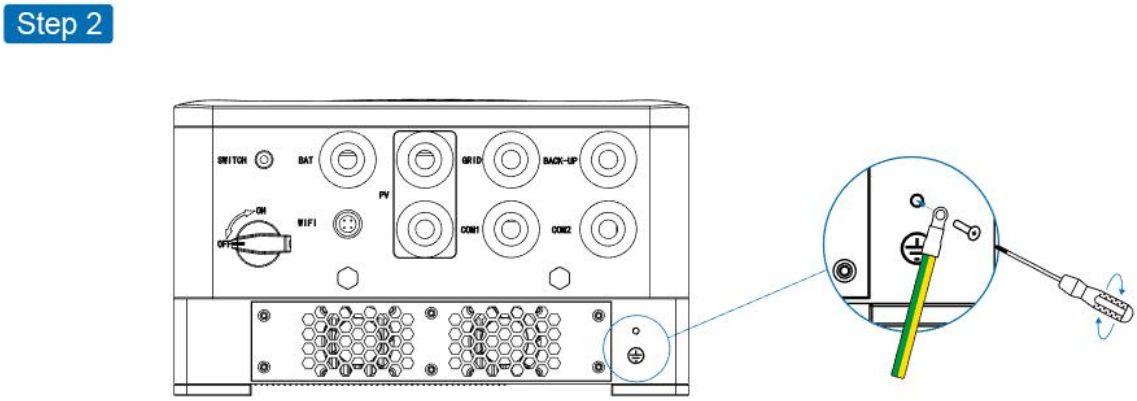

Fix the grounding screw to the grounding connection of the machine housing.

Note:
Make sure the earth cables on the inverter and solar panel frame are separately.

5.Operation

5.1 Control Panel

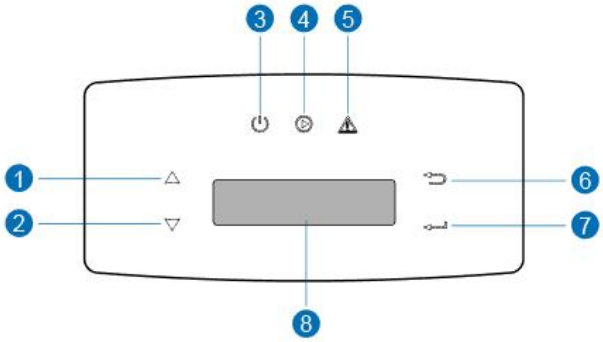

No.	Items	No.	Items
1	Up	5	Warning
2	Down	6	ESC
3	Power On	7	ENTER
4	Running	8	LCD

No.	Items	Color	Indication
Power On	On	Green	Power On
	Off	-	-
Running	On	Yellow	Running
	Off	-	-
Warning	On	Re	Warning
	Off	-	-

5.2 Menu Overview

AF-DH hybrid inverter has a LCD for clearly operating, and menu of the LCD can be presented as following:

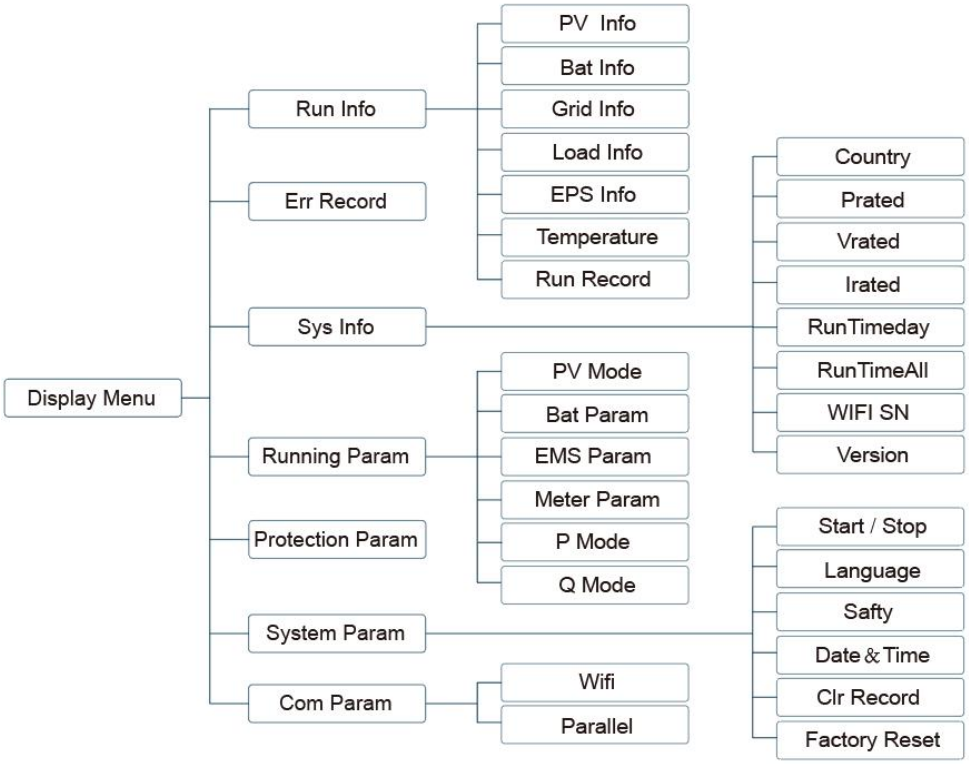

Indication for Menu

Items	Indication
Running Param	To set running parameters
Protection Param	To set protection parameters
System Param	To set system parameters
Com Param	To set communication parameters
EMS Param	To set energy management parameters
P Mode	To set active power control parameters
Q Mode	To set reactive power control parameters

5.3 Setting

The setting is for AF-DH Hybrid inverter. Any doubts, please contact distributor for more details.

5.3.1 Time

Step1: "↵" Entry Menu,

Step2: "▲/▼" Up/Down Chose ***System Param***, "↵" Confirm,

Step3: "▲/▼"Up/Down Chose ***Date&Time***, "↵" Confirm,

Step4: "▲/▼" Set ***Year/Mouth/Date/Hour/Minute/Second***, "↵" Confirm,

Step5: "↩" Return.

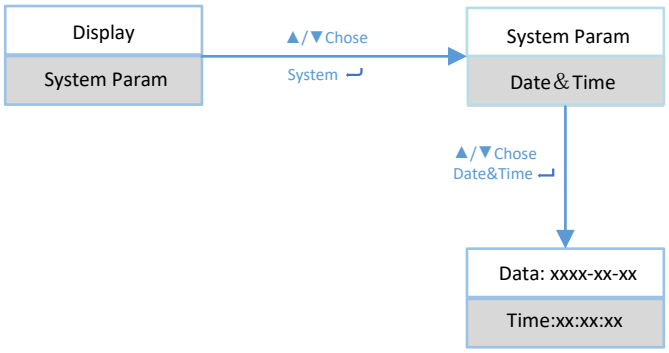

5.3.2 Safety

Step1: "↵" Entry Menu,

Step2: "▲/▼" Up/Down Chose ***System Param***, "↵" Confirm,

Step3: "▲/▼" Up/Down Chose ***Safty***, "↵" Confirm,

Step4: "▲/▼" Chose Safety Rule (<u>In the USA, Select ***US208/US240***</u>), "↵" Confirm,

Step5: "↩" Return.

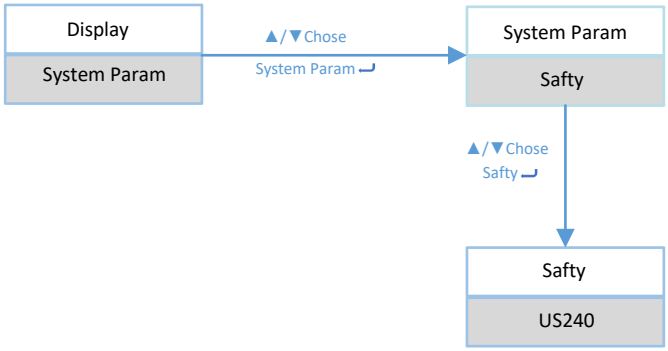

5.3.12 PV Mode

Step1: "↵" Entry Menu,

Step2: "▲/▼" Up/Down Chose ***Running Param***, "↵" Confirm,

Step3: Password Confirm, "▲/▼" Up/Down Chose "**0**", "↵" Confirm,

Step4: "▲/▼" Up/Down Chose ***PV Mode,*** "↵" Confirm,

Step5: "▲/▼" Up/Down Chose ***Independent/Parallel/No Pv***, "↵" Confirm，

Step6: "↩" Return.

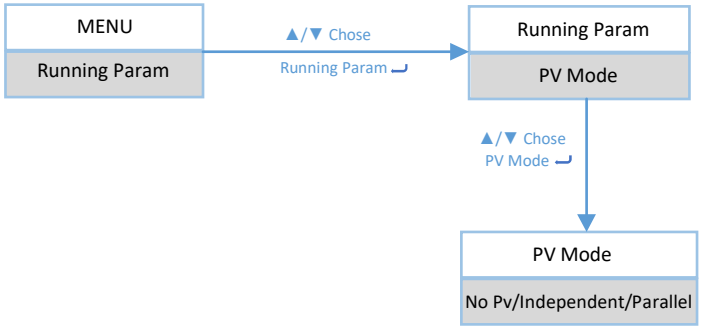

5.3.4 Lithium Battery

Step1: "↵" Entry Menu,

Step2: "▲/▼" Up/Down Chose ***Running Param***, "↵" Confirm,

Step3: Password Confirm, "▲/▼" Up/Down Chose "**0**", "↵" Confirm,

Step4: "▲/▼" Up/Down Chose ***Lith*** (Lithium Battery), "↵" Enter Battery Factory,

Step5: "▲/▼" Up/Down Chose ***IvyHv/JBS48/JBSHV/HSD48/TaiSu/HSDHV/Afore/PYLON/Ivy48/***, "↵" Confirm,

Step6: "↩" Return.

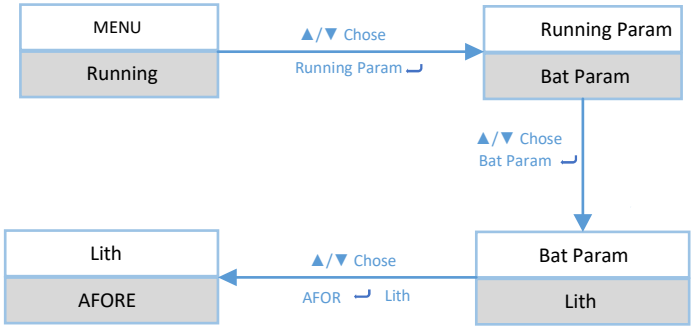

5.3.5 Lead Acid

Step1: "↵" Entry Menu,

Step2: "▲/▼"Up/Down Chose ***Running Param***, "↵" Confirm,

Step3: Password Confirm, "▲/▼" Up/Down Chose "**0**", "↵" Confirm,

Step4: "▲/▼"Up/Down Chose ***Lead*** (Lead Acid Battery), "↵" Confirm,

Step5: "▲/▼"Up/Down Chose ***Capacity/RComp/TComp/VChgMax***,

Step6: "↩" Return.

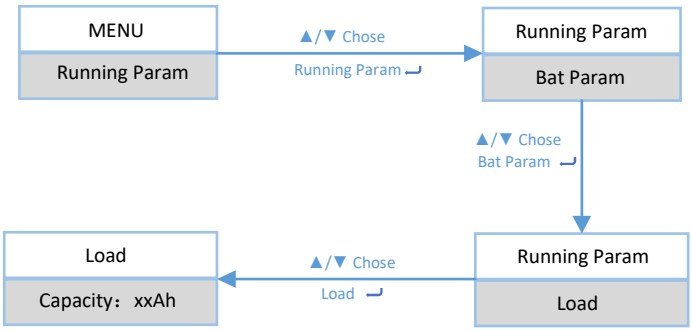

5.3.6 Energy Management System

Step1: "↵" Entry Menu,

Step2: " ▲/▼" Up/Down Chose ***Running Param***, "↵" Confrim,

Step3: Password Confirm, "▲/▼" Up/Down Chose "**0**", "↵" Confirm,

Step4: "▲/▼" Up/Down Chose ***EMS Param***, "↵" Confirm,

Step5: "▲/▼" Up/Down Chose ***EMS Mode***, "↵" Entry MES Setting,

Step6: "▲/▼" Up/Down Chose ***cmdChar/ExtEMS/SelfUse/ChgFst/SellFst/ Maintain*** (Maintenance), "↵" Confirm,

Step7: "↩" Return.

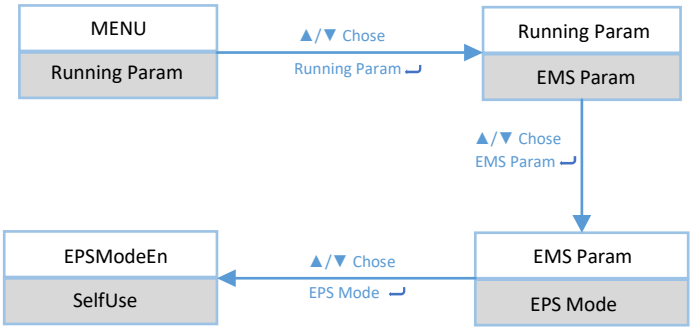

5.3.7 Timing Charging&Discharging

Step1: "↵" Entry Menu,

Step2: "▲/▼" Up/Down Chose ***Running Param***, "↵" Confirm,

Step3: Password Confirm, "▲/▼" Up/Down Chose "**0**", "↵" Confirm,

Step4: "▲/▼" Up/Down Chose ***EMS Param***, "↵"Confirm,

Step5: "▲/▼" Up/Down Chose ***Chg or Dischg Tim***, "↵" Confrim,

Step6: "▲/▼" Up/Down Setting ***Max /Mini Pwr /Max /Mini Volt/Max /Mini Curr***, "↵"Confirm,

Step7: "↩" Return.

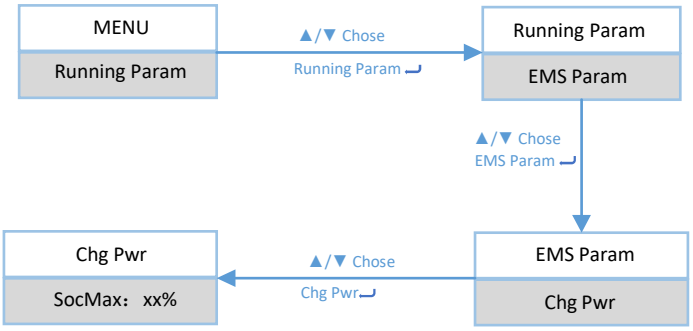

5.3.8 AC Timing Charging

Step1: "↵" Entry Menu,

Step2: "▲/▼" Up/Down Chose ***Running Param***, "↵" Confrim,

Step3: Password Confirm, "▲/▼" Up/Down Chose "**0**", "↵" Confirm,

Step4: "▲/▼" Up/Down Chose ***EMS Param***, "↵" Confrim,

Step5: "▲/▼" Up/Down Chose ***AC Chg***(AC Forced Charging), "↵"Confrim,

Step6: "▲/▼" Up/Down Setting ***AC Chg***(AC Forced Charging Switch On/Off)/***MaxPpct***(Max power percentage(Max power percentage)/***MaxSoc***(Max SOC)/***TimOn1***(Start time)/***TimOff1*** (Stop time) /***TimeOn2***(Start time)/***TimOff2***(Stop time)/***TimOn3***(Start time)/***TimOff3***(Stop Time), "↵" Confirm, (Supporting max 3 stages charging&discharging time)

Step7: "↩" Return.

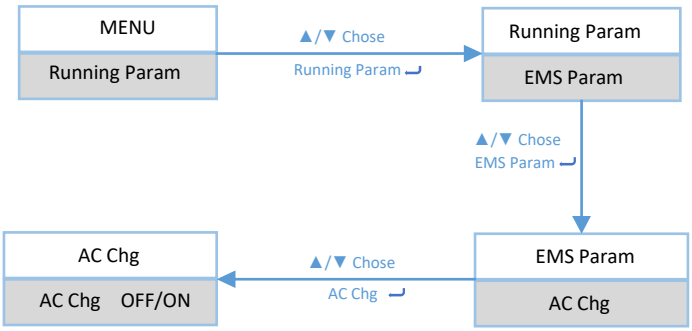

5.3.9 Forced Charging

Step1: "↵" Entry Menu,

Step2: "▲/▼" Up/Down Chose ***Running Param***, "↵" Confrim,

Step3: Password Confirm, "▲/▼" Up/Down Chose "**0**", "↵" Confirm,

Step3: "▲/▼" Up/Down Chose ***EMS Param***, "↵" Confrim,

Step4: "▲/▼" Up/Down Chose ***Force Chg*** (Forced Charging setting), "↵" Confrim,

Step5: "▲/▼" Up/Down Set ***Force Chg*** (Forced Charging Switch On/Off) /***PForce***(Max power percentage)/***MaxSOC***/***TimOn1***(Start time)/***TimOff1*** (Stop time) /***TimOn2***(Start time)/***TimOff2*** (Stop time) /***TimOn3***(Start time)/***TimOff3*** (Stop time), "↵" Confrim, (Supporting max 3 stages charging&discharging time)

Step6: "↩" Return.

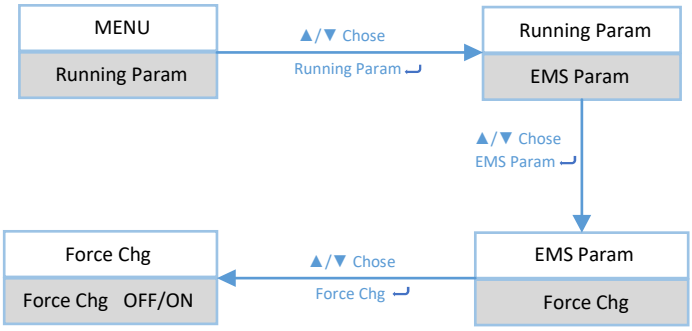

5.3.10 Forced Discharging

Step1: "↵" Entry Menu,

Step2: "▲/▼" Up/Down Chose ***Running Param***, "↵" Confrim,

Step3: Password Confirm, "▲/▼" Up/Down Chose "**0**", "↵" Confirm,

Step4: "▲/▼" Up/Down Chose ***EMS Param***, "↵" Confrim,

Step5: "▲/▼" Up/Down Chose Force ***DChg*** (Forced Discharging Mode), "↵" Confrim,

Step6: "▲/▼" Up/Down Set ***Force DChg*** (Forced Charging Switch On / Off) / ***PForce*** (Max power percentage) / ***MinSOC*** / ***TimOn1*** (Start time) / ***TimOff1*** (Stop time) / ***TimOn2*** (Start time) / ***TimOff2*** (Stop time) / ***TimOn3*** (Start time) / ***TimOff3*** (Stop time), "↵" Confrim, (Support max 3 stages charging&discharging time)

Step7: "↩" Return.

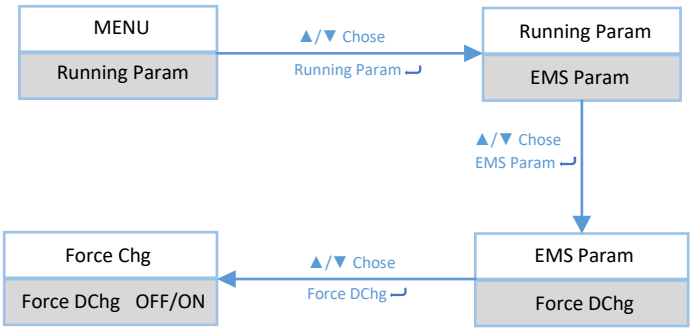

5.3.11 Meter&CT

Step1: "↵" Entry Menu,

Step2: "▲/▼" Up/Down Chose ***running param***, "↵" Confirm,

Step3: Password Confirm, "▲/▼" Up/Down Chose "**0**", "↵" Confirm,

Step3: "▲/▼" Up/Down Chose ***Meter param***， "↵" Confirm,

Step4: "▲/▼" Up/Down Chose ***No Meter / CT/ Meter***， "↵" Confirm,

Step5: if select ***Meter***, "▲/▼" Up/Down chose ***Afore / Afore3 / UKOB / User2***,

Step6: if select ***CT***, "▲/▼" set CT gains,

Step7: "↩" Return.

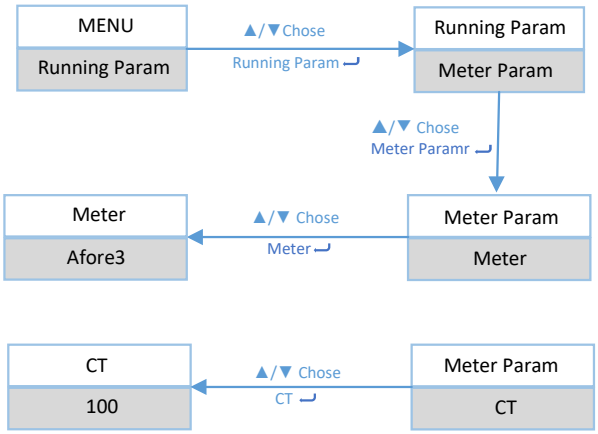

5.3.12 Protection Parameters

Step1: "↵" Entry Menu,

Step2: "▲/▼" Up/Down Chose ***Protection Param***, "↵" Confirm,

Step3: Password Confirm, "▲/▼" Up/Down Chose "**0**", "↵" Confirm,

Step4: "▲/▼" Up/Down Chose ***ISOChk / GfciChk / V.max / V.min / F.max / F.min / ISO.min***, "↵" Confirm,

Step5: "↩" Return.

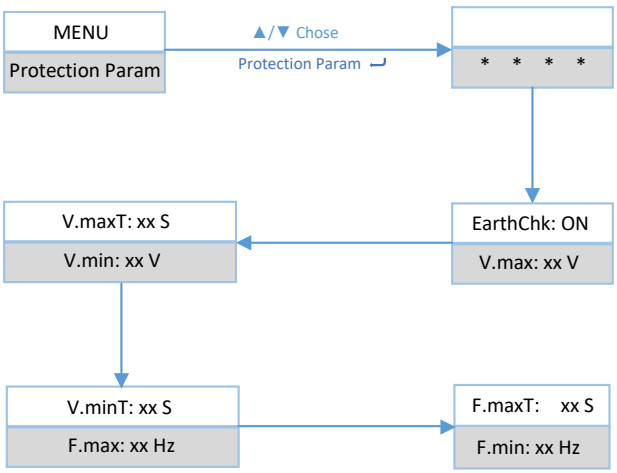

5.3.13 Communication Parameters

Step1: "↵" Entry Menu,

Step2: "▲/▼" Up/Down Chose ***Communication Param***, "↵" Confrim,

Step3: "▲/▼" Up/Down, if chose ***Wifi***, "↵" Confirm,

Step4: "▲/▼" Up/Down Chose ***Wifi Addr*** (defualt value ***"1"***), "↵" Confirm,

Step5: "▲/▼" Up/Down Chose ***Wifi Prot*** (Wifi protocol: ***"Modbus / SunSpec"***), "↵" Confirm,

Step6: "▲/▼" Up/Down, if chose ***parallel*** (Multi-inverter parallel working), "↵" Confirm,

Step7: Under ***P Addr***, " ▲ / ▼ " Up/Down chose inverter number of parallel working , " ↵ " Confirm,

Step8: "▲/▼" Up/Down chose ***P Baud***, "↵" Confirm,

Step9: "↩" Return.

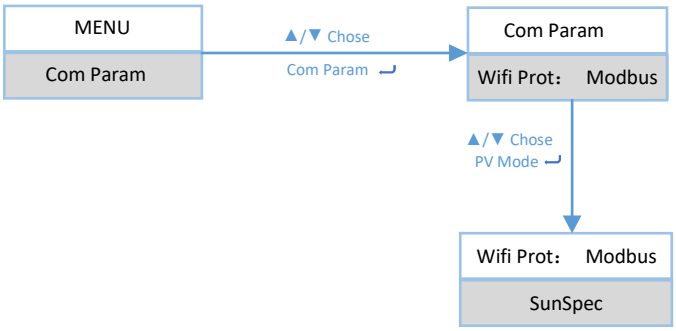

6. Power ON/OFF

Please check the following requirements before testing:

- Installation location is suitable according to Chapter 4.1.3.
- All electrical wires are connected tightly, including PV modules, battery and AC side(Such as the grid side, EPS side, Gen side).
- Earth line and Smart meter/CT line are connected.
- AF-DF hybrid inverters should be set according to the required local grid standard.
- More information please contact with Afore or distributors.

6.1 Power ON

- Turn on DC switch.
- After LCD lighting, hybrid inverter should be set following Chapter 5.3 at the first time.
- When inverter running under normal mode, ***Running*** indicator will light up(Ref. to Chapter 5.1).

6.2 Power off

- Turn off DC switch (in hybrid inverter) and all extra-breaker.

Note:
Hybrid inverter should be restarted after 5 minutes.

6.3 Restart

Restart Hybrid inverter, please follow steps as below:

- Shutdown the inverter Ref. to Chapter6.2.
- Start the inverter Ref. to Chapter 6.1.

7.Maintenance&Trouble Shooting

7.1 Maintenance

Periodically maintenance are necessary, please follow steps as below.

- PV connection: twice a year
- AC connection(Grid and EPS) : twice a year
- Battery connection: twice a year
- Earth connection: twice a year
- Heat sink: clean with dry towel once a year

7.2 Trouble Shooting

The fault messages are displayed when fault occurs, please check trouble shooting table and find related solutions.

Fault Code and Trouble Shooting

Fault Type	Code	Name	Description	Recommended Solution
PV Fault	A01	PvConnectFault	PV connection type different from setup	1. Check PV modules connection 2. Check ***PV Mode*** setup Ref. Chapter 5.3.
	A02	IsoFault	ISO check among PV panels/ wires and ground is abnormal.	1. Check PV modules wires, those wires are soaked or damaged, and then carry out rectification. 2. If the fault occurs continuously and frequently, please ask help for local distributors.

	A03	PvAfciFault	PV current arcing	1. Check PV modules wires and connectors broken or loose connect, and then carry out rectification. 2. If the fault occurs continuously and frequently, please ask help for local distributors.
	A04	Pv1OverVoltFault	PV Voltage over	1. Reconfiguration of PV strings, reduce the PV number of a PV string to reducing inverter PV input voltage. 2. Suggestion that contacting with local distributors.
	A05	Pv2OverVoltFault		
	A06	Pv3OverVoltFault		
	A07	Pv4OverVoltFault		
	A08	-		
	A09	-		
	A10	-		
	A11	-		
	A12	-		
	A13	-		
	A14	-		
	A15	Pv12OverVoltFault		
	A16	PV1ReverseFault	PV(+) and PV(-) reversed Connection	1. Check PV(+) and PV(-) Connect whether reversed or not. 2. If reversed, make correction.
	A17	PV2ReverseFault		
	A18	PV3ReverseFault		
	A19	-		
	A20	-		
	A21	-		
	A22	-		
	A23	-		
	A24	-		
	A25	-		
	A26	-		
	A27	PV12ReverseFault		
	A33	Pv1AbnormalFault	PV voltage or current abnormal	1. Check PV modules partial occlusion or cells damaged. 2. Check PV module wires and connectors broken or loose connect, then repair it.
	A34	Pv2AbnormalFault		
	A35	Pv3AbnormalFault		
	A36	-		
	A37	-		
	A38	-		
	A39	-		
	A40	-		
	A41	-		
	A42	-		
	A43	-		
	A44	-		
	A45	-		

	A46	-		
	A47	-		
	A48	-		
	A49	-		
	A50	-		
	A51	-		
	A52	-		
	A53	-		
	A54	-		
	A55	-		
	A56	Pv24AbnormalFault		
Battery Fault	B01	PcsBatOverVoltFault	Battery voltage over or under	1. Check inverters connected battery lines and connectors broken or loose connect, 2. Carry out rectification if broken or loose. 3. Checking battery voltage is abnormal or not, then maintenance or change new battery.
	B02	PcsBatUnderVoltFault		
	B03	PcsBatInsOverVoltFaul		
	B04	PcsBatReversedFault	Bat. (+) and Bat. (-) are reversed.	1. Check Bat.(+) and Bat.(-)connect reversed or not. 2. Make correction If reversed.
	B05	PcsBatConnectFault	Battery wires loose	1. Check battery wires and connectors damage or loose connect. 2. Carry out rectification if break.
	B06	PcsBatComFault	Battery communication abnormal	1. Check battery side communication wires damage or loose connect, and then carry out rectification. 2. Check battery is off or other abnormal, then Mastertenance battery or change new battery.
	B07	PcsBatTempSensorOpen	Battery temperature sensor abnormal	1. Check battery temperature sensor and connected wires damage or not , then rectification or change new one.
	B08	PcsBatTempSensorShort		
	B09	BmsBatSystemFault	All these faults will be detected or reported by battery BMS.	1. If specific fault high temperature or low temperature, then should change battery installed environment temperature. 2. Restart battery, maybe can working as normal.
	B10	BmsBatVolOverFault		
	B11	BmsBatVolUnderFault		
	B12	BmsCellVolOverFault		
	B13	BmsCellVolUnderFault		
	B14	BmsCellVolUnbanceFau		

	B15	BatChgCurOverFault		3. If this fault occurs continuously and frequently, please ask help for local distributors.
	B16	BatDChgCurOverFault		
	B17	BatTemperatureOverFa		
	B18	BatTemperatureUnderF		
	B19	CelTemperatureOverFa		
	B20	CelTemperatureUnderF		
	B21	BatIsoFault		
	B22	BatSocLowFault		
	B23	BmsInterComFault		
	B24	BatRelayFault		
	B25	BatPreChaFault		
	B26	BmsBatChgMosFault		
	B27	BmsBatDChgMosFault		
	B28	BMSVolOVFault		
	B29	BMSVolLFault		
	B30	VolLockOpenFault		
	B31	VolLockShortFault		
	B32	ChgRefOVFault		
Grid Fault	C01	GridLossFault	Grid lost (islanding)	1. Inverter will restart automatically when the grid return to normal. 2. Check inverter connected with grid connectors and cable normal or not .
	C02	GridUnbalanVoltFault	Grid Voltage unbalanced.	1. The inverter will restart automatically when the grid three phase return to normal. 2. Check inverter connected with the grid connectors and wires normal or not.
	C03	GridInstOverVoltFault	Grid instantaneous voltage over	1. The inverter will restart automatically when the grid three phase return to normal. 2. Contact with local distributor or required grid company adjust protection parameters.
	C04	Grid10MinOverVoltFault	Grid voltage Over by 10 Minutes	1. The inverter will restart automatically when the grid three phase return to normal. 2. Contact with local distributor or required grid company adjust 10 minutes protection voltage parameters.

	C05	GridOverVoltFault	Grid voltage over	1. The inverter will restart automatically when the grid three phase return to normal. 2. Contact with local distributor or required grid company adjust voltage protection parameters.
	C06	GridUnderVoltFault	Grid voltage under	
	C07	GridLineOverVoltFault	Grid line voltage over	
	C08	GridLineUnderVoltFault	Grid line voltage under	
	C09	GridOverFreqFault	Grid Frequency over	1. The inverter will restart automatically when the grid three phase return to normal. 2. Contact with local distributor or required grid company adjust frequency protection parameters.
	C10	GridUnderFreqFault	Grid Frequency under	
Off-grid Fault	D01	UpsOverPowerFault	0ff-grid load over	1. Reduce loads. 2. If sometimes overload, it can be ignored, when generation power enough can be recovery. 3. If those faults occurs continuously and frequently, please ask help for local distributors.
	D02	GridConflictFault	Grid connected to Back-up terminal	1. Check the off-grid port connection correct, disconnect both off-grid and grid ports.
	D03	GenOverVoltFault	Generator voltage over	1. Adjust generator running parameters, make the output voltage, frequency in allowed range. 2. If this fault occurs continuously and frequently, please ask help for local distributors.
	D04	GenUnderVoltFault	Generator voltage under	
	D05	GenOverFreqFault	Generator over frequency	
	D06	GenUnderFreqFault	Generator under frequency	
DC Fault	E01	Pv1HwOverCurrFault	PV current over, triggered by hardware protection circuit	1. Power off, then restart (Ref. Chapter8). 2. If those faults occurs continuously and frequently, please ask help for local distributors.
	E02	Pv2HwOverCurrFault		
	E03	Pv3HwOverCurrFault		
	E04	-		
	E05	-		
	E06	-		
	E07	-		
	E08	-		
	E09	-		
	E10	-		

	E11	-		
	E12	Pv12HwOverCurrFault		
	E13	Pv1SwOverCurrFault	PV current over, triggered by Software logic	1. Power off, power on then restart. 2. If those faults occurs continuously and frequently, please ask help for local distributors.
	E14	Pv2SwOverCurrFault		
	E15	Pv3SwOverCurrFault		
	E16	-		
	E17	-		
	E18	-		
	E19	-		
	E20	-		
	E21	-		
	E22	-		
	E23	-		
	E24	Pv12SwOverCurrFault		
	E33	Boost1SelfCheckFault	PV boost circuit abnormal when self checking	1. Power off, then restart (Ref. Chapter8). 2. If those faults continuously and frequently, please ask help for local distributors.
	E34	Boost2SelfCheckFault		
	E35	Boost3SelfCheckFault		
	E36	-		
	E37	-		
	E38	-		
	E39	-		
	E40	-		
	E41	-		
	E42	-		
	E43	-		
	E44	Boost12SelfCheckFault		
	E45	BusHwOverVoltFault	Bus voltage over	1. Power off, then restart (Ref. Chapter8). 2. If those faults continuously and frequently, please ask help for local distributors.
	E46	BusHwOverHalfVoltFault		
	E47	BusSwOverVoltFault		
	E48	BusSwOverHalfVoltFault		
	E49	BusSwUnderVoltFault	Bus voltage under as running	
	E50	BusUnbalancedFault	DC Bus voltage unbalanced	
	E51	BusBalBridgeHwOverCurFault	Bus Controller current over	1. Power off, then restart (Ref. Chapter8). 2. If those faults continuously and frequently, please ask help for local distributors.
	E52	BusBalBridgeSwOverCurFault		
	E53	BusBalBridgeSelfCheckFault	Bus Controller abnormal when self checking	
	E54	BDCHwOverCurrFault	BiDC current over	1. Power off, then restart (Ref.

	E55	BDCSwOverCurrFault		Chapter8). 2. If those faults continuously and frequently, please ask help for local distributors.
	E56	BDCSelfCheckFault	BiDC abnormal as self checking	
	E57	BDCSwOverVoltFault	BiDC voltage over	
	E58	TransHwOverCurrFault	BiDC current over	
	E59	BDCFuseFault	BiDC fuse broken	1. Change fuse.
	E60	BDCRelayFault	BiDC relay abnormal	1. Power off, then restart (Ref. Chapter8). 2. If those faults continuously and frequently, please ask help for local distributors.
AC Fault	F01	HwOverFault	All over current/ voltage by protection hardware	1. Power off, then restart (Ref. Chapter8). 2. If those faults occurs continuously and frequently, please ask help for local distributors.
	F02	InvHwOverCurrFault	Ac over current by protection hardware	
	F03	InvROverCurrFault	R phase current over	
	F04	InvSOverCurrFault	S phase current over	
	F05	InvTOverCurrFault	T phase current over	
	F06	GridUnbalanCurrFault	On-grid current unbalanced	
	F07	DcInjOverCurrFault	DC injection current over	
	F08	AcOverLeakCurrFault	Ac side leakage current over	1. Check AC insulation and ground wires connect ground is well or not, then repair it. 2. Power off, then restart (Ref. Chapter8).. 3. If those fault occurs continuously and frequently, please ask help for local distributors.
	F09	PLLFault	PLL abnormal	1. Power off, then restart (Ref. Chapter8). 2. If those fault occurs continuously and frequently, please ask help for local distributors.
	F10	GridRelayFault	Grid relay abnormal	
	F11	UpsRelayFault	Ups relay abnormal	
	F12	GenRelayFault	Generator relay abnormal	
	F13	Relay4Fault	Relay4 abnormal	
	F14	UpsROverCurrFault	Off-grid output current over	1. When off-grid the load start impulse current is over, reduce the
	F15	UpsSOverCurrFault		

	F16	UpsTOverCurrFault		start impulse current load. 2. Power off, then restart (Ref. Chapter8). 3. If those fault occurs continuously and frequently, please ask help for local distributors.
	F17	GenROverCurrFault	Generator current over	1. Check generator output voltage, frequency is stability, and adjust generator. 2. Power off, then restart(Ref. Chapter8). 3. If those fault occurs continuously and frequently, please ask help for local distributors.
	F18	GenSOverCurrFault		
	F19	GenTOverCurrFault		
	F20	GenReversePowerFault	Active power injected to generator	
	F21	UpsOverVoltFault	Off-grid output voltage over or under	1. Power off, then restart (Ref. Chapter8). 2. If those faults occurs continuously and frequently, please ask help for local distributors.
	F22	UpsUnderVoltFault		
	F23	UpsOverFreqFault	Off-grid output frequency over or under	
	F24	UpsUnderFreqFault		
	F25	DcInjOverVoltFault	Off-grid DC injection voltage over	
System Fault	G01	PV1CurAdChanFault	Sampling hardware abnormal	1. Power off, then restart (Ref. Chapter8). 2. If those faults occurs continuously and frequently, please ask help for local distributors.
	G02	PV2CurAdChanFault		
	G03	PV3CurAdChanFault		
	G04	-		
	G05	-		
	G06	-		
	G07	-		
	G08	-		
	G09	-		
	G10	-		
	G11	-		
	G12	PV12CurAdChanFault		
	G13	BDCCurrAdChanFault		
	G14	TransCurAdChanFault		
	G15	BalBrigCurAdChanFault		
	G16	RInvCurAdChanFault		
	G17	SInvCurAdChanFault		
	G18	TInvCurAdChanFault		
	G19	RInvDciAdChanFault		
	G20	SInvDciAdChanFault		
	G21	TInvDciAdChanFault		

	G22	LeakCurAdChanFault		
	G23	VoltRefAdChanFault		
	G24	UpsRCurAdChanFault		
	G25	UpsSCurAdChanFault		
	G26	UpsTCurAdChanFault		
	G27	GenRCurAdChanFault		
	G28	GenSCurAdChanFault		
	G29	GenTCurAdChanFault		
	G30	UpsRDcvAdChanFault		
	G31	UpsSDcvAdChanFault		
	G32	UpsTDcvAdChanFault		
	G37	TempAdChanFault	All temperature sensors abnormal	1. Power off, then restart (Ref. Chapter8). 2. If those faults occurs continuously and frequently, please ask help for local distributors.
	G38	VoltAdConflictFault	The sample value of PV, battery and BUS voltage inconsistent	
	G39	CPUAdConflictFault	The sample value between master CPU and slaver CPU inconsistent	
	G40	PowerCalcConflictFault	Power value between PV, battery and AC output inconsistent	
	G41	EnvirOverTempFault	Installation environment temperature over or low	1. Change or improve the installation environment temperature, make running temperature suitable. 2. Power off, then restart (Ref. Chapter8). 3. If those faults occurs continuously and frequently, please ask help for local distributors.
	G42	EnvirLowTempFault		
	G43	CoolingOverTempFault	Cooling temperature over or low	
	G44	CoolingLowTempFault		
	G45	OverTemp3Fault	Temperature3 over or low	
	G46	LowTemp3Fault		
	G47	CpuOverTempFault	CPU temperature over	
	G48	ModelConflictFault	Version conflict with inverter	1. Power off, then restart (Ref. Chapter8). 2. If those faults occurs continuously and frequently, please ask help for local distributors.
Inner Warnning	I01	InterFanWarning	Fan abnormal	1. Remove foreign matter logged in fan. 2. If those faults occurs continuously
	I02	ExterFanWarning		
	I03	Fan3Warning		

				and frequently, please ask help for local distributors.
	I04	EnvirTempAdChanWarning	Some temperature sensors abnormal	1. The warnings are not matter influence. 2. Power off, then restart (Ref. Chapter8). 3. If those faults occurs continuously and frequently, please ask help for local distributors.
	I05	CoolingTempAdChanWarning		
	I06	Temp3AdChanWarning		
	I07	ExtFlashComWarning	Flash abnormal	1. Power off, then restart (Ref. Chapter8). 2. If this those faults continuously and frequently, please ask help for local distributors.
	I08	EepromComWarning	Eeprom abnormal	
	I09	SlaveComWarning	Communication between slaver CPU and master CPU abnormal	
	I10	HmiComWarning	HMI abnormal	
	I11	FreqCalcConflictWarning	Frequency value abnormal	
	I12	UnsetModel	Running model is not initial	1. Contact with local distributor.
Outside Warnning	J01	MeterComWarning	Meter/CT abnormal	1. Check the smart meter model, connection or connectors are correct , any loose , 2. if abnormal, repair or change. 3. Power off, then restart (Ref. Chapter8). 4. If those faults occurs continuously and frequently, please ask help for local distributors.
	J02	MeterConnectWarning	Wires connecting type of meter wrong	1. Check Meter/CT connection, installed place, and installed direction, 2. if abnormal, re-installation. 2. Power off, then restart (Ref. Chapter8). 3. If this those faults continuously and frequently, please ask help for local distributors.
	J03	SohWarning	Battery SOH low	1. Contact with Battery manufacturer.

	J04	GndAbnormalWarning	Earth impedance over by cable loose and so on	1. Check earth line connection or earth connecting impedance, 2. if abnormal, then adjust it. 3. Power off, then restart (Ref. Chapter8). 4. If this those faults continuously and frequently, please ask help for local distributors.
	J05	ParallelComWarning	Communication between master inverter and slaver ones abnormal in parallel mode	1. Check parallel connect communi-cation wires damage, connectors loose, connect port correct or not , 2. if not, then adjust it. 3. Power off, then restart (Ref. Chapter8). 4. If this those faults continuously and frequently, please ask help for local distributors.

8. Specifications

Hybrid Inverter

PV Input	AF3K-DH	AF3.6K-DH	AF4K-DH	AF4.6K-DH	AF5K-DH	AF5.5K-DH
Max. Input Power (kW)	4.5	5.4	6.0	6.9	7.5	8.3
Max. PV Voltage (V)	600					
MPPT Range (V)	80 - 550					
Normal Voltage (V)	360					
Startup Voltage (V)	100					
Max. Input Current (A)	15.5 x 2					
Max. Short Current (A)	26.0 x 2					
Battery Port						
Max. Charge/Discharge Power (kW)	4.5 / 4.5	5.4 / 5.4	6.0 / 6.0	6.9 / 6.9	7.5 / 7.5	8.3 / 8.3
Max. Charge/Discharge Current (A)	50					
Battery Normal Voltage (V)	230					
Battery Voltage Range (V)	80 - 495					
Battery Type	Li-ion / Lead-acid					
AC Port (Grid side)						
Max. Continuous Power (kVA)	3.0	3.6	4.0	4.6	5.0	5.5
Max. Continuous Current (A)	12.5 / 14.5	15.0 / 17.5	17.0 / 19.5	19.5 / 22.5	21.0 / 24	23.0 / 26.5
Nominal Grid Voltage (V)	211 to 264 @ 240 / 183 to 229 @ 208					
Nominal Grid Frequency (Hz)	60					
Output Power Factor	0.99 (Adjustable from 0.8 overexcited to 0.8 underexcited)					
Current THD (%)	< 3					
AC Port (Back-up&Gen.)	**AF3K-DH**	**AF3.6K-DH**	**AF4K-DH**	**AF4.6K-DH**	**AF5K-DH**	**AF5.5K-DH**
Max. Continuous Current (A)	12.5 / 14.5	15.0 / 17.5	17.0 / 19.5	19.5 / 22.5	21.0 / 24.0	23.0 / 26.5
Max. Continuous Power (kVA)	3.0	3.6	4.0	4.6	5.0	5.5
Max. Peak Current (A) (10min)	18.8 / 21.7	22.5 / 26.0	25 / 28.9	28.8 / 33.2	31.3 / 36.1	34.6 / 39.9
Max. Peak Power (kVA) (10min)	4.5 / 4.5	5.4 / 5.4	6.0 / 6.0	6.9 / 6.9	7.5 / 7.5	8.3 / 8.3
Nominal AC Voltage L-L (V)	240 / 208					
Nominal AC Voltage L-O (V)	120 / 104					
Nominal AC Frequency L-O (Hz)	60					
Switching Time (ms)	< 10					
Voltage THD (%)	< 3					
Efficiency						
CEC Efficiency (%)	97.0					
Max. Efficiency (%)	97.6					
PV to Bat. Efficiency (%)	98.1					
Bat. between AC Efficiency (%)	96.8					
Protection	**AF3K-DH**	**AF3.6K-DH**	**AF4K-DH**	**AF4.6K-DH**	**AF5K-DH**	**AF5.5K-DH**
PV Reverse Polarity Protection	Yes					
Bat. Reverse Polarity Protection	Yes					
Over Current/Voltage Protection	Yes					
Anti-Islanding Protection	Yes					
AC Short Circuit Protection	Yes					
Residual Current Detection	Yes					
Ground Fault Monitoring	Yes					
Insulation Resister Detection	Yes					
PV Arc Detection	Yes					
Rapid Shut Down	Yes					
Enclosure Protect Level	IP65 / NEMA4X					
General Data	**AF3K-DH**	**AF3.6K-DH**	**AF4K-DH**	**AF4.6K-DH**	**AF5K-DH**	**AF5.5K-DH**
Dimensions (L x W x H)	560 x 400 x 229 mm / 22.0 x 15.7 x 9.0 in					
Weight	25 kgs / 55 lbs					
Topology	Tranformerless					
Cooling	Natural Convection					
Relatively Humidity	0 - 100 %					
Operating Temperature Range	- 25 - 60 °C / - 77 - 140 °F					
Operating Altitude	< 4000 m / < 13123 ft					
Noise Emission (dB)	< 25					
Standby Consumption (W)	< 10					
Mounting	Wall Bracket					
Communication with RSD	SUNSPEC					
Display & Communication Interfaces	LCD, LED, RS485, CAN, Wi-Fi, 4G					
Certification & Approvals	UL 1741 SA, CSA 22.2 No. 107-01, UL 1998, UL1699B, Rules21, HECO Rule 14					
EMC	FCC part15 CLASS B					

PV Input	AF6K-DH	AF7K-DH	AF7.6K-DH	AF8K-DH	AF8.6K-DH	AF9.6K-DH
Max. Input Power (kW)	9.0	10.5	11.4	12.0	12.9	15.0
Max. PV Voltage (V)	600					
MPPT Range (V)	80 - 550					
Normal Voltage (V)	360					
Startup Voltage (V)	100					
Max. Input Current (A)	15.5 x 2	15.5 x 3				
Max. Short Current (A)	26.0 x 2	26.0 x 3				
Battery Port						
Max. Charge/Discharge Power (kW)	9.0 / 9.0	10.5 / 10.3	11.4 / 10.3	11.5 / 10.3	11.5 / 10.3	11.5 / 10.3
Max. Charge/Discharge Current (A)	50					
Battery Normal Voltage (V)	230					
Battery Voltage Range (V)	80 - 495					
Battery Type	Li-ion / Lead-acid					
AC Port (Grid side)						
Max. Continuous Power (kVA)	6.0	7.0	7.6	8.0	8.6	9.6
Max. Continuous Current (A)	25.0 / 29.0	29.5 / 34.0	32.0 / 36.5	33.5 / 38.5	36.0 / 41.5	40.0 / 46.5
Nominal Grid Voltage (V)	211 to 264 @ 240 / 183 to 229 @ 208					
Nominal Grid Frequency (Hz)	60					
Output Power Factor	0.99 (Adjustable from 0.8 overexcited to 0.8 underexcited)					
Current THD (%)	< 3					
AC Port (Back-up&Gen.)	**AF6K-DH**	**AF7K-DH**	**AF7.6K-DH**	**AF8K-DH**	**AF8.6K-DH**	**AF9.6K-DH**
Max. Continuous Current (A)	25.0 / 29.0	29.5 / 34.0	32.0 / 36.5	33.5 / 38.5	36.0 / 41.5	40.0 / 46.5
Max. Continuous Power (kVA)	6.0	7.0	7.6	8.0	8.6	9.6
Max. Peak Current (A) (10min)	37.5 / 43.3	43.8 / 49.5	47.5 / 49.5	47.9 / 49.5	47.9 / 49.5	47.9 / 49.5
Max. Peak Power (kVA) (10min)	9.0 / 9.0	10.5 / 10.3	11.4 / 10.3	11.5 / 10.3	11.5 / 10.3	11.5 / 10.3
Nominal AC Voltage L-L (V)	240 / 208					
Nominal AC Voltage L-O (V)	120 / 104					
Nominal AC Frequency L-O (Hz)	60					
Switching Time (ms)	< 10					
Voltage THD (%)	< 3					
Efficiency						
CEC Efficiency (%)	97					
Max. Efficiency (%)	97.6					
PV to Bat. Efficiency (%)	98.1					
Bat. between AC Efficiency (%)	96.8					
Protection	**AF6K-DH**	**AF7K-DH**	**AF7.6K-DH**	**AF8K-DH**	**AF8.6K-DH**	**AF9.6K-DH**
PV Reverse Polarity Protection	Yes					
Bat. Reverse Polarity Protection	Yes					
Over Current/Voltage Protection	Yes					
Anti-Islanding Protection	Yes					
AC Short Circuit Protection	Yes					
Residual Current Detection	Yes					
Ground Fault Monitoring	Yes					
Insulation Resister Detection	Yes					
PV Arc Detection	Yes					
Rapid Shut Down	Yes					
Enclosure Protect Level	IP65 / NEMA4X					
General Data	**AF6K-DH**	**AF7K-DH**	**AF7.6K-DH**	**AF8K-DH**	**AF8.6K-DH**	**AF9.6K-DH**
Dimensions (L x W x H)	560 x 400 x 229 mm / 22.0 x 15.7 x 9.0 in					
Weight	25 kgs / 55 lbs					
Topology	Tranformerless					
Cooling	Natural Convection	Intelligent Fan				
Relatively Humidity	0 - 100 %					
Operating Temperature Range	- 25 - 60 °C / - 77 - 140 °F					
Operating Altitude	< 4000 m / < 13123 ft					
Noise Emission (dB)	< 25	< 40				
Standby Consumption (W)	< 10					
Mounting	Wall Bracket					
Communication with RSD	SUNSPEC					
Display & Communication Interfaces	LCD, LED, RS485, CAN, Wi-Fi, 4G					
Certification & Approvals	UL 1741 SA, CSA 22.2 No. 107-01, UL 1998, UL1699B, Rules21, HECO Rule 14					
EMC	FCC part15 CLASS B					

Afore Meter

Parameter		
Type	TAPM-50KW	SAPM-10KW
AC power	50KW	10KW
Max AC Power	55KW	11KW
Degree of accuracy	1%	1%
AC Rating rvoltage	230/400V	230V
AC voltage range	320-440V	184-253V
AC Rating current	72.5A	43.5A
Max AC current	80A	60A
Rating frequency	50/60Hz	50/60Hz
Frequency range	45-65Hz	45-65Hz
Grid type	3P+N	L+N
Communication	RS485	RS485
Dimmension(W,L,H)	70 x 100 x 65 mm	30 x 100 x 65 mm
Enclosure	IP20	IP20
Installation	35mm rail	35mm rail

www.aforenergy.com

Version: HH1004-01

Afore New Energy Technology (Shanghai) Co., Ltd.

T 86-21-54326236 F +86-21-54326136 E info@aforenergy.com

Ad Building 7, No.333 Wanfang Rd, Minhang District, Shanghai, China. 201112